Operation Manual

READ BEFORE USING

MEDRAD® Mark 7 Arterion

Injection System

MEDRAD® Mark 7 Arterion Injection System

Operation Manual

The MEDRAD® Mark 7 Arterion Injection System has an expected service life* of 7 years from the date of product installation when operated according to the instructions provided with this device. These 7 years include suggested or mandatory actions of preventative maintenance and repair activities, as well as required calibration(s) that are needed. Required reading includes the instructions for use and other materials provided with the device. This also includes any hardware and software updates that may be required.

* EXPECTED SERVICE LIFE - The length of time that an individual unit, lot, or batch of devices is expected to remain functional after it is placed into use.

Report any serious incident that has occurred in relation to this device to Bayer (radiology.bayer.com/contact) and to your local European competent authority (or, where applicable, to the appropriate regulatory authority of the country in which the incident has occurred).

1 Introduction ..... 1 - 1
1.1 Important Safety Notice ..... 1 - 1
1.2 Certifications ..... 1 - 1
1.3 Intended Use ..... 1 - 1
1.4 Contraindications ..... 1 - 1
1.5 Restricted Sales ..... 1 - 1
1.6 Training Information ..... 1 - 2
1.7 Disclaimers ..... 1 - 2
2 Symbols and Icons ..... 2 - 3
2.1 Notified Body ..... 2 - 3
2.2 Regulatory Classifications ..... 2 - 3
2.3 Warnings ..... 2 - 3
2.4 Buttons and Icons ..... 2 - 5
2.4.1 Display Control Unit Buttons and Icons ..... 2 - 5
2.4.2 Injector Head Buttons and Icons ..... 2 - 5
2.4.3 Power Unit Icons ..... 2 - 6
2.5 Packaging ..... 2 - 7
3 System Warnings, Cautions, and Notices ..... 3 - 11
3.1 Warnings ..... 3 - 11
3.2 Cautions ..... 3 - 12
3.3 Notices ..... 3 - 12
4 System Overview ..... 4 - 13
4.1 Injection Protection ..... 4 - 13
4.2 Pressure Limiting ..... 4 - 14
4.3 System Technical Specifications ..... 4 - 14
4.3.1 Input Power Requirements ..... 4 - 14
4.3.2 Technical Specifications ..... 4 - 15
4.4 High Pressure Connector Tubing Specifications (Non-Twist & Go) ..... 4 - 15
4.5 Display Control Unit ..... 4 - 16
4.5.1 Display Control Unit Sterile Sheath ..... 4 - 16
4.6 Injector Head ..... 4 - 16
4.7 Power Unit ..... 4 - 17
4.8 Imaging System Interface ..... 4 - 17
4.9 MEDRAD® VFlow ..... 4 - 17
4.10 Start Switches ..... 4 - 17
4.10.1 Handswitch and Footswitch ..... 4 - 17
4.10.2 MEDRAD VFlow Hand Controller ..... 4 - 17
4.11 Pedestal and Stand Movement ..... 4 - 18
4.11.1 Pedestal System ..... 4 - 18
4.11.2 Head Stand (KMA 320 RT) and Adjustable Height Stand (KMA 330) ..... 4 - 19
4.11.3 Mark 7 Arterion Stand Mounting Kit Configuration ..... 4 - 20
5 Using and Understanding the Display Control Unit Screen ..... 5 - 23
5.1 Home Tab ..... 5 - 23
5.1.1 Programmed Window ..... 5 - 23
5.1.2 Actuals Window ..... 5 - 24
5.1.3 Sentinel Window ..... 5 - 24
5.2 Protocols Tab ..... 5 - 24
5.3 History Tab ..... 5 - 24
5.4 Options Tab ..... 5 - 24

5.4.1 Modify Options ..... 5 - 25
5.5 Help Tab ..... 5 - 25
5.6 Display Control Unit Lock-outs ..... 5 - 26
5.7 Performing Touch Screen Calibration ..... 5 - 26

6 Using and Understanding the Injector Head ..... 6 - 27

6.1 Injector Head Components ..... 6 - 27
6.2 Injector Head Position ..... 6 - 28
6.3 Syringe Interface ..... 6 - 28
6.3.1 Piston Auto Retract ..... 6 - 29
6.4 Pressure Jacket ..... 6 - 29
6.4.1 Pressure Jacket Storage ..... 6 - 29
6.5 Injector Head Displays ..... 6 - 30
6.5.1 Flow Rate (A) ..... 6 - 30
6.5.2 Volume (B) ..... 6 - 30
6.5.3 Pressure Limit (C) ..... 6 - 30
6.5.4 Volume Remaining (D) ..... 6 - 30
6.6 Injector Head Controls ..... 6 - 31
6.6.1 Enable Button (F) ..... 6 - 31
6.6.2 Fill Strip (H) ..... 6 - 31
6.6.3 Auto-Fill Button (I) ..... 6 - 31
6.7 Armed Light ..... 6 - 31
6.8 Manual Knob ..... 6 - 32
6.9 Syringe Heat Maintainer ..... 6 - 32
6.10 Injector Head Lock-outs ..... 6 - 32

7 Power Up and Shutdown the Injector ..... 7 - 33

7.1 Powering up the System ..... 7 - 33
7.2 Shutdown ..... 7 - 33
7.3 Emergency Shutdown ..... 7 - 33

8 Setting and Managing Protocols ..... 8 - 35

8.1 Set Injection Parameters from the Home Tab ..... 8 - 35
8.1.1 Set Injection Parameters on Home Tab - Single ..... 8 - 35
8.1.2 Set Injection Parameters on Home Tab - Phased ..... 8 - 36
8.1.3 Set Injection Parameters on Home Tab - Variable Flow Rate ..... 8 - 37
8.2 Manage Protocols from the Protocols Tab ..... 8 - 38
8.2.1 Create Protocols ..... 8 - 38
8.2.2 Recall a Stored Protocol ..... 8 - 41
8.2.3 Edit an Existing Protocol ..... 8 - 42
8.2.4 Delete a Protocol ..... 8 - 43

9 Preparing for Injection ..... 9 - 45

9.1 Installing the Mark 7 Arterion or Twist & Go Syringe ..... 9 - 45
9.2 Filling and Purging the Mark 7 Arterion or Twist & Go Syringe ..... 9 - 47
9.3 Installing and Purging Standard High Pressure Connector Tubing ..... 9 - 48
9.4 Installing and Purging Twist & Go HPCT ..... 9 - 49
9.5 Installing the MEDRAD® VFlow Hand Controller ..... 9 - 50
9.6 Connecting to and Purging the Catheter ..... 9 - 51
9.7 Enabling 15 mL Purge Feature and Choosing Configuration Options ..... 9 - 52
9.7.1 15 mL Purge ON ..... 9 - 52
9.7.2 15 mL Purge OFF ..... 9 - 52
9.8 Defining a Protocol ..... 9 - 53

9.9 Turning ISI On or Off ..... 9 - 53

10 Arming and Injecting ..... 10 - 55

10.1 Purged Air Confirmation ..... 10 - 55
10.2 Arming the Injector ..... 10 - 55
10.2.1 Arm Single Mode ..... 10 - 56
10.2.2 Arm Multi Mode ..... 10 - 58
10.3 Performing an Injection ..... 10 - 59
10.3.1 Performing a Single mL/s Injection in Arm Single Mode ..... 10 - 59
10.3.2 Performing a Single mL/m Injection in Arm Single Mode ..... 10 - 59
10.3.3 Performing a Single mL/s or Variable Flow Rate Injection in Arm Multi Mode ..... 10 - 59
10.3.4 Performing a Phased Injection ..... 10 - 60
10.3.5 Performing an Injection with Imaging System Interface (ISI) ..... 10 - 60
10.4 Completing an Injection ..... 10 - 63
10.5 Refilling Syringe During a Procedure ..... 10 - 64
10.5.1 Refilling Syringe with 15 mL Purge Feature Enabled ..... 10 - 65

11 Tear Down ..... 11 - 67

11.1 Remove Disposables ..... 11 - 67
11.2 Clean up ..... 11 - 67
11.3 Storing the Injector ..... 11 - 68

12 System Messages ..... 12 - 69

12.1 Error Messages ..... 12 - 69
12.2 Sentinel Messages ..... 12 - 69
12.3 Popup Messages ..... 12 - 71

13 VirtualCare™ Option ..... 13 - 75

14 Cleaning and Maintenance ..... 14 - 77

14.1 Daily ..... 14 - 77
14.1.1 Cleaning the Injector Head, Syringe Heat Maintainer, Drop Front Cover, Pressure Jacket, Piston, Syringe Interface, and Table Bracket ..... 14 - 77
14.1.2 Inspecting the Injector Head ..... 14 - 79
14.1.3 Inspecting the Pressure Jacket ..... 14 - 79
14.1.4 Inspecting the Heat Maintainer ..... 14 - 80
14.1.5 Inspecting the Display Control Unit ..... 14 - 80
14.1.6 Inspecting the Table Mount Bracket ..... 14 - 81
14.1.7 Inspecting the Pedestal ..... 14 - 81
14.1.8 Inspecting the Power Unit ..... 14 - 81
14.2 Monthly ..... 14 - 81
14.2.1 Cleaning the Display Control Unit, Pedestal, Power Unit, and Table Bracket ..... 14 - 81
14.2.2 Inspecting and Cleaning the Internal Air Filter ..... 14 - 81
14.2.3 Performing an Operational Checkout ..... 14 - 82
14.3 Annually ..... 14 - 84
14.3.1 Injection System Calibration ..... 14 - 84
14.3.2 Checking Leakage ..... 14 - 84

15 Installation - System and Accessory ..... 15 - 85

15.1 Unpacking the Injection System ..... 15 - 85
15.2 Pedestal Mount Installation ..... 15 - 86
15.3 Power Unit Installation ..... 15 - 89
15.3.1 Power Unit Connections ..... 15 - 90
15.3.2 Power Unit Floor Mount Bracket Assembly ..... 15 - 91
15.3.3 Relocate Power Unit Connectors ..... 15 - 92

15.4 Injector Head Mounting Options ..... 15 - 93
15.4.1 Head Stand Installation (KMA 320RT) ..... 15 - 93
15.4.2 Adjustable Height Stand Installation (KMA 330) ..... 15 - 93
15.4.3 Adjustable Table Bracket Installation (KMA 350) ..... 15 - 93
15.4.4 Overhead Counterpoised System Installation ..... 15 - 93
15.5 Display Control Unit Mounting Options ..... 15 - 93
15.5.1 Fulcrum Mount Kit Installation ..... 15 - 93
15.5.2 Desk Stand Kit Installation ..... 15 - 94
15.5.3 Fixed Table Mount Installation ..... 15 - 95
15.5.4 Wall Mount Bracket Installation ..... 15 - 97
15.6 Accessory Installation ..... 15 - 99
15.6.1 Syringe Heat Maintainer Installation ..... 15 - 99
15.6.2 Syringe Pressure Jacket Installation ..... 15 - 100
15.6.3 Handswitch and Footswitch Installation ..... 15 - 100
15.6.4 Handswitch Mount Kit ..... 15 - 101
15.6.5 Display Control Unit Sterile Sheath Installation ..... 15 - 102
15.6.6 Cable Bracket Installation ..... 15 - 103
15.7 Stand Mounting Kit Installation ..... 15 - 110
15.8 Power Unit Bracket Installation ..... 15 - 110
15.9 Display Control Unit (DCU) Support Assembly Installation ..... 15 - 112

16 Installation - ISI ..... 16 - 115

16.1 Siemens Axiom Artis with ODU and Cios Alpha System ..... 16 - 115
16.1.1 Step 1: Remove Power Unit Cover ..... 16 - 115
16.1.2 Step 2: Relocate Power Unit ISI Connector ..... 16 - 116
16.1.3 Step 3: Re-install Power Unit Cover ..... 16 - 116
16.1.4 Step 4: Complete Leakage Check and Operational Checkout ..... 16 - 116
16.2 Siemens Systems with Z5 Connector ..... 16 - 118
16.2.1 Step 1: Remove Power Unit Cover ..... 16 - 118
16.2.2 Step 2: Remove Internal Power Unit Universal ISI Cable Assembly ..... 16 - 119
16.2.3 Step 3: Install Internal Power Unit Siemens ISI Cable Assembly, Bayer Cable 3016360/60163802 .. 16 - 120
16.2.4 Step 4: Re-Install Power Unit Cover ..... 16 - 120
16.2.5 Step 5: Complete Leakage Check and Operational Checkout ..... 16 - 120

17 Specifications ..... 17 - 121

17.1 System Component Weights and Dimensions ..... 17 - 121
17.1.1 Pedestal System Weight and Dimensions ..... 17 - 121
17.1.2 Display Control Unit Weight and Dimensions ..... 17 - 122
17.1.3 Injector Head Weight and Dimensions ..... 17 - 122
17.1.4 Power Unit Weight and Dimensions ..... 17 - 123
17.2 Mounting Components Weights and Dimensions ..... 17 - 123
17.2.1 Pedestal Mount Weight and Dimensions ..... 17 - 123
17.2.2 Head Stand Weight and Dimensions ..... 17 - 124
17.2.3 Adjustable Height Stand Weight and Dimensions ..... 17 - 124
17.2.4 Stand Mounting Kit Components Weights and Dimension ..... 17 - 125
17.2.5 Adjustable Table Mount (KMA 350) Weight and Dimensions ..... 17 - 126
17.2.6 OCS Mount Weight and Dimensions ..... 17 - 126
17.2.7 Fixed Table Mount Weight and Dimensions ..... 17 - 129
17.2.8 Display Control Unit Desk Stand Mount Weight and Dimensions ..... 17 - 129
17.2.9 Display Control Unit Wall Mount Weight and Dimensions ..... 17 - 130
17.2.10 Power Unit Floor Mount Weight and Dimensions ..... 17 - 130
17.3 ISI Technical Specifications ..... 17 - 131
17.3.1 ISI Output Specifications ..... 17 - 131
17.3.2 ISI Input Specifications ..... 17 - 132

17.3.3 ISI Connector Specifications ..... 17 - 132
17.4 Environmental Specifications ..... 17 - 136
17.4.1 Operating ..... 17 - 136
17.4.2 Non-Operating: (Transportation and Storage) ..... 17 - 136
17.4.3 EMI/RFI ..... 17 - 136
17.4.4 Equipment Classification ..... 17 - 136
17.4.5 Class I Product ..... 17 - 136
17.4.6 Type CF Defibrillation-proof Applied Part ..... 17 - 136
17.4.7 IPX1 ..... 17 - 136
17.4.8 Continuous Mode of Operation ..... 17 - 137
17.4.9 EU Directive ..... 17 - 137
17.5 Power Cable Specifications ..... 17 - 137
17.6 Mark 7 Arterion Injection System to IT Network Connections ..... 17 - 137

18 Options and Accessories ..... 18 - 139

18.1 Mark 7 Arterion Disposables/Syringe Kits ..... 18 - 139
18.2 Mark 7 Arterion System Mount Options ..... 18 - 139
18.2.1 Injector Head Mount Options ..... 18 - 139
18.2.2 Power Unit Mount Options ..... 18 - 139
18.2.3 Display Control Unit Mount Options ..... 18 - 140
18.2.4 Cable Brackets ..... 18 - 140
18.3 Mark 7 Arterion Accessory Devices and Kits ..... 18 - 140
18.3.1 Switches ..... 18 - 140
18.3.2 Accessory Devices and Kits ..... 18 - 140
18.4 Mark 7 Arterion Cords and Cables ..... 18 - 141
18.4.1 Power Cords ..... 18 - 141
18.4.2 Head Power and Communication Extension Cables ..... 18 - 141
18.4.3 Display Cables ..... 18 - 141
18.5 OCS Mounting Systems ..... 18 - 142
18.5.1 Stationary Ceiling Mount ..... 18 - 142
18.5.2 Mobile Ceiling Mount ..... 18 - 142
18.5.3 Wall Mount ..... 18 - 142
18.5.4 Ceiling Mount Plate ..... 18 - 142
18.6 OEM Imaging System Interface Cables ..... 18 - 142
18.6.1 General Electric ..... 18 - 142
18.6.2 Philips ..... 18 - 143
18.6.3 Siemens ..... 18 - 143
18.6.4 Ziehm ..... 18 - 143
18.6.5 Universal Imaging System Interface Cables ..... 18 - 143
18.6.6 Equipotential Cables ..... 18 - 143

19 Compliance to IEC 60601-1-2 / 2nd, 3rd, and 4th Editions ..... 19 - 145

1 Introduction

This manual applies to the MEDRAD® Mark 7 Arterion Injection System, also referred to as the System, Catalog Numbers: ART 700 PEDL, ART 700 TABL, ART 700 OCS, ART 700 BASC, ART 700 VFL.

Read all of the information contained in this manual. Understanding this information will assist you in operation of the MEDRAD® Mark 7 Arterion Injection System in a safe manner.

1.1 Important Safety Notice

⚠ IMPORTANT SAFETY NOTICE ⚠

This manual and the equipment it describes are for use by qualified medical professionals with proper training and experience in angiographic procedures and the use of the ***MEDRAD® Mark 7 Arterion (Mark 7 Arterion) Injection System***. The manual is intended as instructions on the proper use of the Mark 7 Arterion Injector and Syringe.

The ***Mark 7 Arterion Injection System*** is designed to operate with syringes from Bayer and that use of other, unauthorized syringes, may result in syringe rupture or leaking. Accordingly, only authentic syringes from Bayer should be used in the operation of ***Mark 7 Arterion Injection System***.

The safe and effective use of the ***Mark 7 Arterion Injection System*** to a large degree depends upon factors solely under the control of the medical professionals using the system. There is no substitute for a properly trained and vigilant angiographic team. It is important that the operating instructions and the user warnings and cautions supplied with this injection system be read, understood and followed.

Before starting any angiographic injection procedure, the angiographic team should be trained in the particular angiographic procedures to be performed. In addition, the angiographic team should be familiar with the medical literature related to angiographic procedures and the benefits of performing angiographic procedures with automated injection systems versus the potential complications and risks, including but not limited to air embolism.

Read and understand all the information contained in this manual. Understanding this information will assist you in operating the ***Mark 7 Arterion Injection System*** in a safe and effective manner.

1.2 Certifications

This device is equipped to operate at 100 - 240 VAC, 50/60 Hz, 1000 VA, and is designed to comply with IEC 60601-1 (2nd and 3rd Edition Amendment 1) and IEC 60601-1-2 (2nd, 3rd, and 4th Edition) standards, including national differences.

1.3 Intended Use

The MEDRAD® Mark 7 Arterion Injection System is intended to be used specifically for the purposes of injecting contrast medium and common flushing solutions into humans for angiographic studies.

1.4 Contraindications

This device is not intended to be used for chemotherapy and is not intended to administer fluids other than intravascular contrast agents and common flushing solutions.

1.5 Restricted Sales

Rx Only - U.S. Federal law restricts this device to sale by or on the order of a licensed health care practitioner.

1.6 Training Information

This manual is intended as an extension of the user interface of the ***Mark 7 Arterion Injection System*** to provide procedural and technical information. Additional training information for the ***Mark 7 Arterion Injection System*** will be available in the following formats:

- On-site initial installation and additional training, as requested
- In-service video/DVD
- Syringe instruction for use (IFU)
- Service manual

Please contact Bayer or local representative from Bayer if any of these resources are needed.

1.7 Disclaimers

Operating specifications and feature availability may vary by country. Check with your local product representative and county-specific operating instructions.

External wiring and modifications disclaimers: Bayer disclaims liability for any modifications or interfaces with other equipment that are not in conformity with the specifications and information contained in this manual.

Anyone who connects additional equipment to the device or configures a medical system is responsible that the system complies with the relevant requirements of IEC 60601-1. An accessory or equipment connected to the device must be certified to either IEC 60601-1 (Operator or Patient Environment Use) or, outside the patient environment, the level of safety must be equivalent to equipment complying with their respective IEC or ISO safety standards, e.g. IEC 62368-1 or IEC 60950-1 (Operator Environment Use Only), and must comply with the relevant requirements according to IEC 60601-1. Consult Bayer for any modifications to the equipment.

2 Symbols and Icons

The symbols and icons discussed in the sections below describe the requirements to which the Mark 7 Arterion Injection System conforms, how warnings are displayed in manual, and the icons used on the equipment and equipment packaging.

2.1 Notified Body

CE 0086 — Indicates that this device conforms to requirements of the European Medical Device Directive 93/42/EEC

2.2 Regulatory Classifications

Type Cardiac Floating (CF) Defibrillation-Proof applied part (IEC 60417-2, 5336)

IPX1 — IPX1 Code that specifies the degree of protection provided by the enclosure against vertically falling water drops (IEC 60529).

Indicates separate collection for Electrical and Electronic Equipment per Directive 2002/96/EC. Refer to the following website for additional information: www.weee.bayer.com

2.3 Warnings

Warning: Indicates hazardous voltages (ISO 7010, W012)

Warning: Refer to warnings and cautions on Instructions for Use packaged in each carton. (ISO 7010, W001)

Warning: Indicates a pinch or crush hazard.(ISO 7000, W024)

Attention: Refer to warnings and cautions on Instructions for Use packaged in each carton. (ISO 15223-1, 5.4.4)

Caution: Indicates hot surface. Item can be hot and should not be touched without taking care. (IEC TR 60878, 5041)

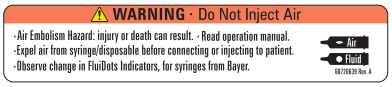

Air Warning Label

- Air Embolism Hazard: injury or death can result.
- Read operation manual.
- Expel air from syringe/disposable before connecting or injecting to patient.
- Observe change in MEDRAD® FluiDots Indicators, for syringes from Bayer.

Medical - General Medical Equipment
As To Electrical Shock, Fire, and Mechanical Hazards Only
In accordance with ANSI/AAMI ES60601-1 (2005) + AMD 1 (2012)
CAN/CSA-C22.2 No. 60601-1 (2014)

Pushing Prohibited. Do not push at or above this point on the Injector. (ISO 7010 P017)

Consult instructions for use. (ISO 15223-1, 5.4.3)

See accompanying documentation. This symbol indicates the user shall refer to the instructions-for-use to ensure safe operation.(ISO 7010, M002)

Maximum weight of the injector system and accessories during normal use:

Arterion Pedestal, total weight: 66 kg/146 lbs
Arterion Pedestal Basic, total weight: 42 kg/93 lbs
Arterion Pedestal Basic Adjustable, total weight: 44 kg/97 lbs

(ISO 7000, 1321B; ISO 15223-1, 5.4.3)

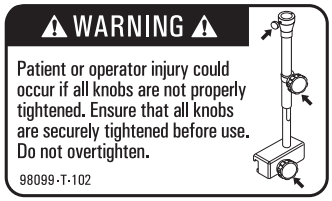

Table Mount Warning
Patient or operator injury could occur if all knobs are not properly tightened. Ensure that all knobs are securely tightened before use. Do not overtighten.

WARNING

Indicates that the information is a warning. Warnings advise you of circumstances that could result in serious injury or death to the patient or operator. Read and understand the warnings before operating the injection system.

CAUTION

Indicates that the information is a caution. Cautions advise you of circumstances that could result in minor or moderate injury to the patient or operator. Read and understand the cautions before operating the injection system.

NOTICE	Indicates that the information is a notice. Notices advise you of circumstances that could result in damage to the device. Read and understand the notices before operating the injection system.
NOTE	Indicates that the information that follows is additional important information or a tip that will help you recover from an error or point you to related information within the manual.

2.4 Buttons and Icons

The buttons on the Display Control Unit (DCU), Injector Head, and Power Unit allow operators to access functions on the injector system. The icons used on the DCU, Injector Head, and Power Unit notify operators about system processes and identify connection ports.

2.4.1 Display Control Unit Buttons and Icons

	Identifies Display Control Unit brightness controls (IEC TR 60878, 5056) Brightness Up (+) and Down (-)
	Purged Air Confirmation icon - indicates that the operator has confirmed that all air has been purged.
	Indicates that Display Control Unit is locked because someone is accessing another Display Control Unit or the Injector Head controls.
	Indicates on/off switch (IEC TR 60878: 5010, 5265)
P21	The handswitch connection location found on the back of the Display Control Unit
P28	The Power Unit cable connection location found on the back of the Display Control Unit
	Indicates that an Imaging System Interface (ISI) is enabled and functioning properly. This symbol is also used throughout the manual to indicate ISI specific steps.
	Operators use the **End Case** button to end the injection for a patient case, to retract the syringe plunger, to clear the Total Contrast number, and to create a record of the case.
	Injection Indicator displays during an injection.

2.4.2 Injector Head Buttons and Icons

	The **Enable** button activates the **Fill Strip** and **Auto-Fill** button.

LOC	Displays in Volume Remaining LED on the Injector Head when an operator is accessing the Display Control Unit.
	The **Fill Strip** allows operators to retract and advance the piston from the Injector Head.
	The Auto-Fill button fills the syringe with a user defined contrast volume and at a user defined speed.
	Identifies the Volume Remaining LED.
	Identifies rotation direction on the manual knob for manually moving the piston. Clockwise is forward movement.
	The Syringe Heat Maintainer connection location
	Future expansion port
J31	Hand Controller
J32	Identifies the Service Port.
	Pressure Jacket Syringe Alignment

2.4.3 Power Unit Icons

O I	Symbols on the Power Switch: (IEC TR 60878: 5007, 5008) O - Off I - On
	Indicates Alternating Current and identifies the Power Unit power cord connection. (IEC 60417, 5032)
1	Identifies a connection for Display Control Unit1. The Power Unit has two connection points.
2	Identifies a connection for Display Control Unit2. The Power Unit has two connection points.

	Identifies the handswitch or footswitch connection (IEC TR 60878: 5322, 5114)
	Identifies the Equipotential connection.(IEC 60417, 5021)
	Identifies the Earth Ground point (IEC TR 60878, 5017) (This terminal is meant for supplementary grounding. Please contact Bayer prior to using this terminal.)
	Identifies an Injector Head connection. The Power Unit has two connection points.
	Identifies the Imaging System Interface connection.
	Identifies the CAN connection.
J11	Identifies the service port. **NOTE:** Used by Bayer or personnel trained by Bayer.
J12	Future expansion port
J13	Future expansion port
J14	Future expansion port

2.5 Packaging

REF	Catalog Number (ISO 15223-1, 5.1.6)
2 STERILIZE	Do not re-sterilize. (ISO 15223-1, 5.2.6)
	Do not use if package is opened or damaged. (ISO 15223-1, 5.2.8)
	Single use only (ISO 15223-1, 5.4.2)
LOT	Lot number (ISO 15223-1, 5.1.5)

	Date of Manufacture (ISO 15223-1, 5.1.3)
	Non-Pyrogenic Fluid Path (ISO 15223-1: 5.6.2, 5.6.3)
Rx Only	Federal (USA) law restricts this device to sale by or on the order of a licensed healthcare practitioner. (FDA Final Rule - Use of Symbols in Labeling Docket No. FDA–2013–N–0125)
SN	Serial number (ISO 15223-1, 5.1.7)
PN	Part number
STERILE R	Sterilized using Irradiation (ISO 15223-1, 5.2.4)
STERILE EO	Sterilized using Ethylene Oxide (ISO 15223-1, 5.2.3)
	Use By (ISO 15223-1, 5.1.4)
	Atmospheric Pressure Range (ISO 15223-1, 5.3.9)
PB	Chinese Recycling symbol for paperboard
CB	Chinese Recycling symbol for corrugated cardboard
	Do Not Stack (IEC TR 60878, 2402)
EC REP	Authorized Representative in the European Community (ISO 15223-1, 5.1.2)
	Fragile, handle with care (ISO 15223-1, 5.3.1)
	Humidity range (ISO 15223-1, 5.3.8)

ISTA tested

Keep Dry (ISO 15223-1, 5.3.4)

Manufacturer (ISO 15223-1, 5.1.1)

This product contains certain toxic or hazardous substances or elements and can be used safely during its environmental protection use period (indicated by the number in the middle of the logo). This product should be recycled immediately after its environmental protection use period has expired.

Temperature Range (ISO 15223-1, 5.3.7)

This Side Up (ISO 7000, 0623)

Not made with natural rubber latex

3 System Warnings, Cautions, and Notices

3.1 Warnings

⚠WARNING
Air Embolism Hazard - Serious patient injury or death may result. • Do not inject air. • Purge all air from syringe and disposables before connecting or injecting to patient. • Use only accessories and options provided by Bayer which are designed specifically for the injection system. • Inspect system and do not use when signs of damage are evident. • Verify that the MEDRAD® FluiDots indicators are rounded to ensure that fluid is present in the syringe. • No modification of equipment is allowed. • The system is not to be serviced or maintained while in use with a patient.
Serious patient and/or worker injury or death may result. • Use of non-Bayer supplied disposables, including administration sets and additions to administration sets, such as but not limited to bleed back control devices and pressure transducers may cause patient injury if not properly connected or flushed. These devices must be compatible with your system. Refer to manufacturer's instructions for proper use of these devices.
Do not use if sterile package is opened or damaged. • Patient or operator injury may result if package is opened or damaged, or if damaged components are used. Visually inspect contents and package before each use.
Cross contamination hazard - Serious patient and/or worker injury or death may result. • Ensure only syringes from Bayer are used on the system. • Do not store filled syringes for later use. • Discard previously filled unused syringes. • Do not reuse disposables. • **For devices labeled for single use, please note: This product is intended for single use only. Do not resterilize, reprocess or reuse. The disposable devices have been designed and validated for single use only.** Re-use of the single use disposable devices pose risks of device failure and risks to the patient. Potential device failure includes significant component deterioration with extended use, component malfunction, and system failure. Potential risks to the patient include injury due to device malfunction or infection as the device has not been validated to be cleaned or re-sterilized.
Procedure Delay Hazard - Serious patient and/or worker injury or death may result. • Turn off any equipment that could generate an electrostatic discharge during procedure.
Electric Shock Hazard - Serious patient and/ or worker injury or death may result. • The system should be opened and serviced by Bayer or service personnel trained by Bayer. • Use only power cord approved for use on ***Mark 7 Arterion***. • For U.S. installations, equipment shall only be connected to Hospital Grade or Hospital Only outlets. • Disconnect the system from line power before cleaning or attempting to perform any maintenance or repairs. • Avoid contact with pins. • Ensure that connector covers are in place or cables are connected. • Do not allow injector head to contact patient. • Equipment must only be connected to supply mains with protective earth. • Unplug system prior to servicing.

3.2 Cautions

⚠CAUTION
Environmental Contamination Hazard - Minor or moderate patient and/ or worker injury may result. • Follow sterile technique specifically, maintain sterility of the syringe tip and plunger, syringe barrel internal surface, Quick Fill Tube, high pressure connector tubing, catheter, and Display Control Unit Sheath. • Properly discard disposables after use, in accordance with hospital hazard waste disposal procedures.
Mechanical Hazard - Minor or moderate patient and/ or worker injury may result. • Do not use injector head handle to move injector system. • Do not use the cabling or syringe to position injector system. • Do not use system in the presence of flammable or combustible gases or other agents. • Turn off system power and disconnect patient when system malfunction occurs.

3.3 Notices

NOTICE
Mechanical Hazard - Equipment Damage may result. • Do not hang items on the Display Control Unit or Wall Mounting Bracket. • Do not oil the friction plate on the Wall Mount Bracket.
Electro-Mechanical Hazard - Equipment Damage may result. • Do not use tools to over tighten connections or to assist in the removal of disposables. • Do not roll pedestal over cables. • Regular preventive maintenance is recommended to ensure that the system stays calibrated and functions properly. Refer to maintenance section of this manual or contact Bayer for additional information. • Allow two hours for the injector to reach room temperature before use. • Follow Electrostatic Discharge (ESD) protection practices. • Disconnect the power cord before removing or replacing PC boards. • Do not apply voltage to ISI connector. • Provide only a switch closure if the injector is being started by an external start connection. • Do not block Power Unit vents. • Installation clearance should be a minimum of 3 to 5 inches (8 to 13 cm). • Before installing the Table Mount, ensure the table rail can withstand a minimum vertical static load of 18 kg (40 lbs.) Refer to the table manufacturer documentation for weight load information. • Do not over tighten Table Mount knob. • Do not force the Table Mount onto the table rail. • Loosen Table Mount knob prior to removal of components.

4 System Overview

This chapter describes:

- "Injection Protection"
- "Pressure Limiting"
- "System Technical Specifications"
- "High Pressure Connector Tubing Specifications (Non-Twist & Go)"
- "Display Control Unit"
- "Injector Head"
- "Power Unit"
- "Imaging System Interface"
- "Start Switches"
- "Pedestal and Stand Movement"

Figure 4 - 1: Mark 7 Arterion Injection System

A	Display Control Unit	B	Injector Head	C	Power Unit

4.1 Injection Protection

The following means are provided to protect against over and under injections:

An on-screen indication of insufficient volume is provided whenever the total volume programmed to be delivered is greater than the amount of fluid in the syringe.

The system monitors injections to detect over rate or over volume conditions due to system faults. The delivered volume is also monitored against the total programmed volume for the injection.

Once the system has disarmed a tone will sound and a disarm message displays on the Display Control Unit screen.

When any fault condition is detected, the injection will stop.

4.2 Pressure Limiting

The purpose of the programmed pressure limit is to protect the patient, the catheter, and any disposable device attached to the injector.

As a general rule, set pressure limit no higher than the max pressure rating of the weakest component in the fluid path (tubing, stopcocks, connectors, catheters, administration sets, etc.).

Max pressure rating examples for an example scenario:

- Tubing - 1200 psi
- Stopcock - 1050 psi
- Catheter - 1200 psi

In this case, set the pressure limit no higher than 1050 psi because anything higher could potentially cause the component to fail.

Typical factors to consider and how they affect Pressure:

Factors	Effects on Pressure	
	Decrease Pressure	**Increase Pressure**
Fluid Viscosity	Low	High
Catheter and Tubing Length	Short	Long
Catheter ID	Large	Small

Consider the above factors when setting pressure limit to achieve the desired injection flow rate. Proper pressure limit setting optimizes the angiographic images.

The injector applies the minimum pressure needed to achieve the programmed flow rate. If the pressure from the injector exceeds the programmed pressure limit, the system cannot achieve the flow rate and a Sentinel message displays.

Pressure information can be found in the ***History*** tab.

4.3 System Technical Specifications

4.3.1 Input Power Requirements

100-240 VAC

50/60 Hz

1000 VA

4.3.2 Technical Specifications

Table 4 - 1: System Technical Specs

Flow Rate:	0.1-45.0 mL/s in 0.1 mL/s increments (single and phased)
	0.1-59.9 mL/m in 0.1 mL/m increments (single mL/m)
	1.0-10.0 mL/s in 0.1mL/s increments (variable)
Volume:	1-150 mL in 1 mL increments
Pressure Limit (150 mL syringe):	100-1200 psi in 1 psi increments
	689-8273 kPa in 1 kPa increments
Rise Time:	0.0-9.9 seconds in 0.1s increments
Delay Time:	0.0-99.9 seconds in 0.1s increments
Manual Fill Speed:	1-20 mL/s in 1 mL/s increments
Auto Fill Speed:	1-10 mL/s in 1 mL/s increments
Fill Volume:	1-150 mL in 1 mL increments
Syringe Size:	150 mL
Protocol Memory:	39 Protocols (4 default, 35 storable)
Injection History Memory	Approximately 50 injections

4.4 High Pressure Connector Tubing Specifications (Non-Twist & Go)

The injection system was designed to use the MEDRAD® Mark 7 Arterion Syringe and ***Twist and Go*** Syringe. When using the Mark 7 Arterion Syringe, tubing should meet the following specifications to operate in a safe and effective manner.

- Disposable tubing shall be rated to a minimum of 1200 psi
- Disposable tubing shall have a minimum internal diameter of 0.070" with a maximum length of 72".
- Syringe interface luer shall be a standard female luer as defined in:
  - ISO 594-1:1986
  - EN 20594-1:1993/AC:1996/A1:1997.
- Catheter interface luer shall be a standard male luer as defined in:
  - ISO 594-1:1986
  - ISO 594-2: 1998
  - EN 20594-1:1993/AC:1996/A1:1997.
- Disposable tubing shall be made from a clear polymeric material that allows for proper visualization of fluid path to ensure all air has been adequately purged with fluid before connection to a patient.

4.5 Display Control Unit

The injection system Display Control Unit consists of a touch screen display. From the Display Control Unit, an operator can manage protocols, arm and disarm the injector, review injection history, set options, and view help topics.

Figure 4 - 2: Display Control Unit

The injection system supports the connection of a second Display Control Unit. In a two Display Control Unit system, both Display Control Units have the same controls and functionality. Depending on operational situations, only one of the Display Control Units may be active at a time. For example, if an operator is entering a protocol on a Display Control Unit in the Control room, the system locks-out the Display Control Unit in the Scan room. See "5.6 - Display Control Unit Lock-outs" for more information.

For more information about the navigating through Display Control Unit screens, see "Chapter 5 - Using and Understanding the Display Control Unit Screen".

4.5.1 Display Control Unit Sterile Sheath

If the Display Control Unit will be used in the Sterile Field, a sheath such as the Display Control Unit Sheath (AVA 500 DCOV) from Bayer should be used. See "15.6.5 - Display Control Unit Sterile Sheath Installation".

4.6 Injector Head

The Injector Head has a handle that is used to rotate the head. The Injector Head position determines what functions are active and what values display on the Injector Head. The Injector Head keypad and Manual Knob can be used to fill and purge a syringe. A drop front allows operators to load syringes from the front. The Syringe Heat Maintainer clamps onto the Pressure Jacket and connects to the underside of the Injector Head and is designed to keep pre-warmed contrast in the syringe.

For more information about the Injector Head or the Syringe Heat Maintainer, see "Chapter 6 - Using and Understanding the Injector Head".

Figure 4 - 3: Injector Head

4.7 Power Unit

The injection system Power Unit supplies power to the Injector Head and the Display Control Unit. As the main communications hub, the Power Unit provides system communications to all connected components. A green light illuminates when the Power Unit is on.

The front plate on the Power Unit contains a serviceable air filter. For cleaning instructions, see "Chapter 14 - Cleaning and Maintenance".

4.8 Imaging System Interface

The Imaging System Interface (ISI) allows the injection system to interface with an imaging system to provide synchronization of an injection and an X-ray exposure. To use ISI on the injection system, configure the system from the Display Control Unit ***Options*** tab. See "Chapter 5 - Using and Understanding the Display Control Unit Screen". For more information on how ISI interacts with the injection system, see "10.3.5 - Performing an Injection with Imaging System Interface (ISI)".

4.9 MEDRAD® VFlow

MEDRAD VFlow (VFlow) enables the use of Variable Flow Rate injections. In the Variable Flow Rate injection mode, the injector automatically re-arms after each injection. A Variable Flow Rate injection can be initiated by the Hand Controller and ranges from 1 - 10 mL/sec in increments of 0.1 mL/sec. Variable Flow Rate is intended for use in those procedures where low volumes are injected and Variable Flow Rate control is desired. The system has an option for receiving audible feedback when using the Hand Controller. The feedback indicates the flow rate.

See "5.4 - Options Tab" for instructions on how to enable VFlow.

4.10 Start Switches

The injection system can be used with a handswitch, footswitch and/or hand controller. The switches allow the operator to initiate an injection.

	Single mL/s	Phased	Variable Flow Rate	Single mL/m
Handswitch	X	X		X
Footswitch	X	X		X
Hand Controller	X	X	X	X

4.10.1 Handswitch and Footswitch

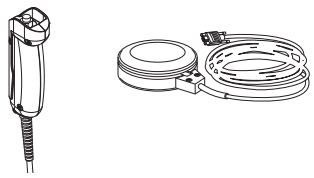

Figure 4 - 4: Handswitch and Footswitch

For installation instructions, see "15.6.3 - Handswitch and Footswitch Installation".

4.10.2 MEDRAD VFlow Hand Controller

The VFlow Hand Controller is a sterile device intended for single patient use.

The Hand Controller works in two different modes, Variable Flow Rate and Fixed Flow Rate. When in the Variable Flow Rate injection mode, the flow rate increases incrementally as the Hand Controller plunger (A) is depressed, and decreases as the Hand Controller is released. In the Fixed Flow Rate injection mode, the Hand Controller acts as a start switch, and release of the device ceases all flow.

The Hand Controller button (B) is non-functional and will beep from the Injector head and DCU when depressed.

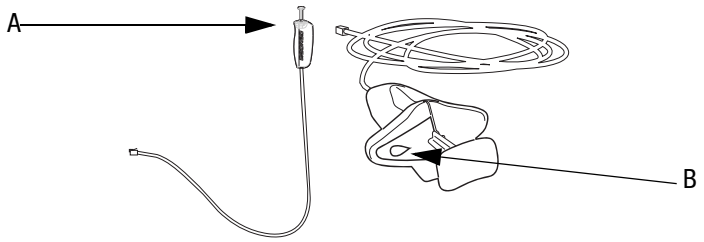

Figure 4 - 5: Hand Controller

NOTE: The hand controller is required to perform Variable Flow Rate injections. For installation instructions, see"9.5 - Installing the MEDRAD® VFlow Hand Controller".

4.11 Pedestal and Stand Movement

4.11.1 Pedestal System

Place pedestal system components into the approximate positions shown in Figure 4 - 6: Approximate Component Positions for System Movement prior to moving the system. When necessary, lift pedestal by using the handle to move over obstacles.

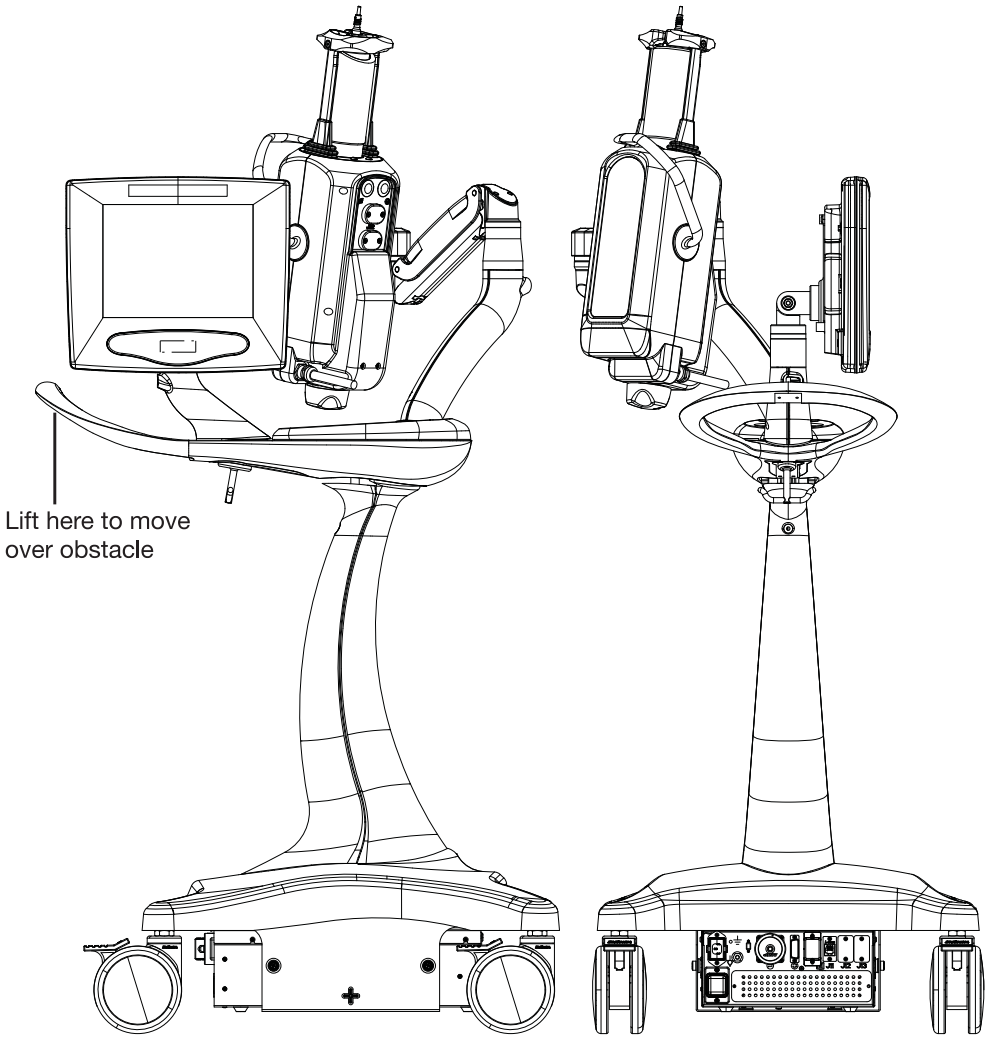

Figure 4 - 6: Approximate Component Positions for System Movement

4.11.2 Head Stand (KMA 320 RT) and Adjustable Height Stand (KMA 330)

Place hands in the positions shown in Figure 4 - 7: Approximate Hand Positions to Move Head Stand and Adjustable Height Stand Over Obstruction to move an injector Head mounted on a Head Stand and Adjustable Height Stand over obstacles.

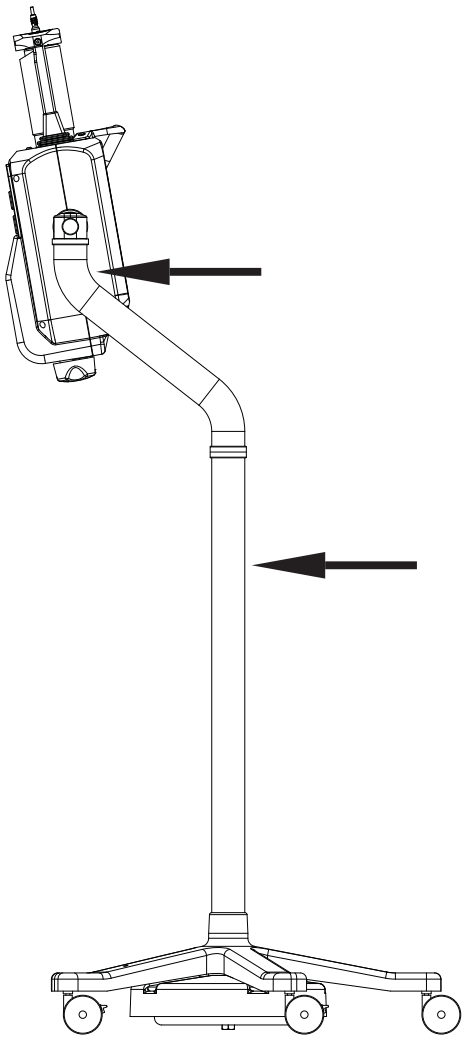

Figure 4 - 7: Approximate Hand Positions to Move Head Stand and Adjustable Height Stand Over Obstruction

4.11.3 Mark 7 Arterion Stand Mounting Kit Configuration

Place the Mark 7 Arterion Stand Mounting Kit components into the approximate positions and place hands in the positions shown in Figure 4 - 8: Approximate Hand Positions to Move Stand Mounting Kit Configuration over Obstruction prior to moving the system.

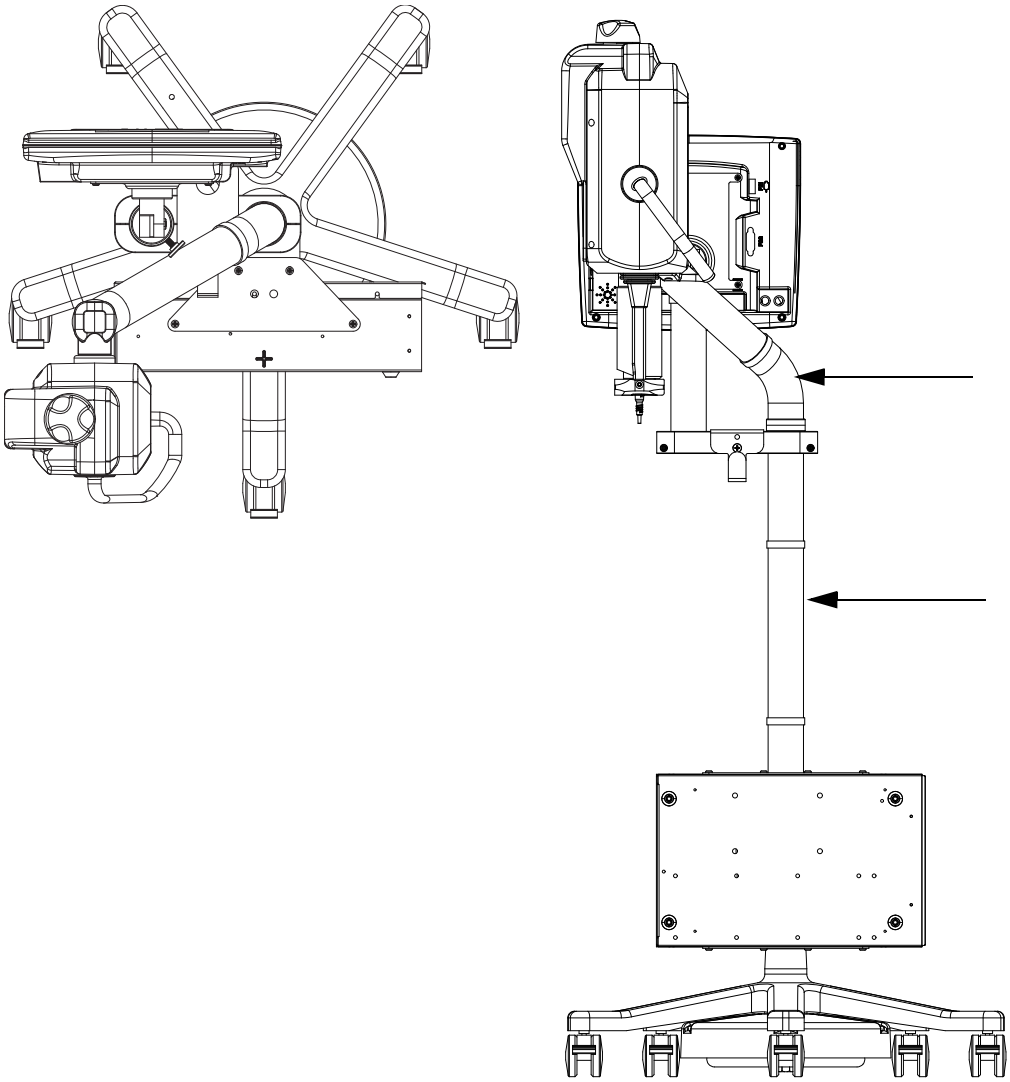

Figure 4 - 8: Approximate Hand Positions to Move Stand Mounting Kit Configuration over Obstruction

5 Using and Understanding the Display Control Unit Screen

The Display Control Unit touch screen has five tabs from which an operator can manage protocols, arm and disarm the injector, review injection history, set options, and view help topics.

NOTE: An operator will be locked-out from a Display Control Unit if another operator is performing functions on the Injector Head or another Display Control Unit connected to the same system.

The chapter discusses:

- "Home Tab"
- "Protocols Tab"
- "History Tab"
- "Options Tab"
- "Help Tab"
- "Display Control Unit Lock-outs"
- "Performing Touch Screen Calibration"

5.1 Home Tab

Operators can set protocols, select the Single or Phased protocol, or arm the injector on the ***Home*** tab. This tab has a **Programmed** window (A), **Actuals** window (B), and **Sentinel** window (C). Each of these windows is discussed below.

Figure 5 - 1: Home Tab

5.1.1 Programmed Window

The **Programmed** window displays the protocol parameters for an injection including Flow Rate, Volume, Pressure, Rise time (Rise Time is not listed for Variable Flow Rate or mL/m protocols), and Delay (Delay is not listed for phased and Variable Flow Rate or mL/m protocols).

Operators can set Single mL/s and mL/m, Phased, and Variable Flow Rate protocols from the **Programmed** window. For more information, see "8.1 - Set Injection Parameters from the Home Tab".

5.1.2 Actuals Window

The **Actuals** window displays Peak (maximum Flow Rate achieved), Delivered (actual total volume delivered), Total Contrast (total volume delivered for the current case), and the **End Case** button. An operator presses the **End Case** button after completing a patient procedure and before removing the disposables to retract the syringe plunger. This button also zeroes the Total Contrast and creates a new case entry on the ***History*** tab. For more information on cases, see "5.3 - History Tab".

5.1.3 Sentinel Window

The Sentinel window displays system messages, such as “Rotate head down to arm”. The Sentinel window also displays the status of the last injection.

The Sentinel window message flashes momentarily when the system cannot arm.

A list of messages is available in Chapter 13 “System Messages.”

5.2 Protocols Tab

Operators can store new protocols, recall stored protocols, and edit existing protocols on the ***Protocols*** tab. For information on how to manage protocols from the ***Protocols*** tab, see "8.2 - Manage Protocols from the Protocols Tab".

NOTE: To set protocol parameters from the ***Home*** tab, see "8.1 - Set Injection Parameters from the Home Tab".

5.3 History Tab

The ***History*** tab shows a list of recent injections with date and time of the injection and the programmed parameters and actuals. Injections are grouped by case. Cases are reset when an operator selects the **End Case** button from the ***Home*** tab.

For example, an operator may want to group all of the injections for one patient together. The operator performs all of the injections for a patient. The operator then selects the **End Case** button after the last injection has completed. The system groups all of the injections for that patient together. This group of injections can be retrieved from the ***History*** tab.

5.4 Options Tab

Operators can modify system settings from the ***Options*** tab. A green LED displays beside the current setting for each option. When an operator changes a setting, the system adds an asterisk next to the option name to identify unconfirmed setting changes. To enable the new settings, select one of the other tabs, such as ***Home***. A popup displays requesting confirmation for the new value. Select **Yes** to confirm the setting. Select **No** to go to the selected tab without saving the changes; the system reverts to the previous settings.

Table 5 - 1: Options

Option	Description
Language	Sets the Display Control Unit display language.
Flow Rate	Select mL/m or mL/s.
Fill Volume	Determines the volume of contrast drawn into the syringe when an operator presses the **Auto-Fill** button on the Injector Head.
Fill Speed	Determines the speed at which the injector draws contrast into the syringe when an operator presses the **Auto-Fill** button on the Injector Head.

Table 5 - 1: Options

Option	Description
ISI	Enables or disables Imaging System Interface (Single mL/s protocols only).
Auto Retract	Enables or disables the piston auto retract feature. See "6.3.1 - Piston Auto Retract" for more information.
Phased	Enables or disables Phased protocols.
Date/Time	Sets the system date and time and the calibration date.
Pressure Units	Sets the pressure measurement to PSI or kPa. PSI is set by default.
Head Audio Volume	Sets the audio volume level for the Injector Head.
DCU Audio Volume	Sets the audio volume level for the Display Control Unit.
Upgrade	Used by Bayer or personnel trained by Bayer to activate features.
MEDRAD® VFlow	Enables Variable Flow Rate injections when this feature is activated from Upgrade. Contact Bayer to enable this feature.
Audio Feedback	When VFlow is enabled, the system provides a sound when the Hand Controller plunger is depressed.
15 mL Purge	With this feature enabled, the system provides a choice between two configurations (ON or OFF) of the 15 mL Purge Option. Contact Bayer to enable this feature.

5.4.1 Modify Options

To modify an option:

1. Select the ***Options*** tab. A list of options displays. For an explanation of the options, see Table 5 - 1: Options.
2. Select an option. A center panel displays with setting choices or a numeric keypad based on the option.
3. Make the appropriate changes.
4. Select another tab to save the changes. A popup displays requiring confirmation to save the changes or revert back to previous settings. Select **Yes** to save changes. Select **No** to revert back to previous settings.

5.5 Help Tab

The ***Help*** tab provides a list of help topics.

To view a help topic

1. Select the ***Help*** tab.
2. Select the topic name.

5.6 Display Control Unit Lock-outs

The Display Control Unit will be locked-out while an operator is interacting with the Injector Head controls, or while an operator is accessing another Display Control Unit in a dual Display Control Unit system.

The inactive Display Control Unit remains in lock-out until (A):

1. the operator finishes accessing the active Display Control Unit, and active Display Control Unit displays the Home tab,
2. or an operator has accessed the active Display Control Unit and doesn't do anything for a minute,
3. or an operator has not interacted with the Injector Head controls for a period of several seconds.

Figure 5 - 2: Display Control Unit Locked Out

5.7 Performing Touch Screen Calibration

Calibrate the Display Control Unit if the touch screen does not respond appropriately when pressing buttons on the screen. To calibrate at the Safety Screen, simultaneously press the **Brightness Up** and **Brightness Down** buttons on the back of the Display Control Unit. Follow the on-screen instructions that display.

NOTE: Touch the center of the calibration targets to ensure proper touch screen calibration.

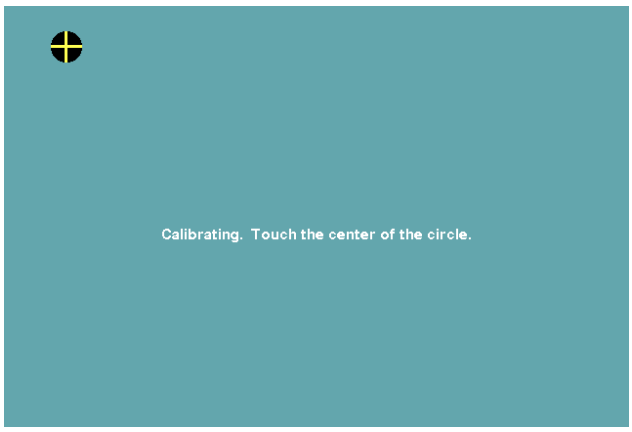

Figure 5 - 3: Touch Screen Calibration

6 Using and Understanding the Injector Head

This chapter describes:

- "Injector Head Components"
- "Injector Head Position"
- "Syringe Interface"
- "Pressure Jacket"
- "Injector Head Displays"
- "Injector Head Controls"
- "Armed Light"
- "Manual Knob"
- "Syringe Heat Maintainer"
- "Injector Head Lock-outs"

6.1 Injector Head Components

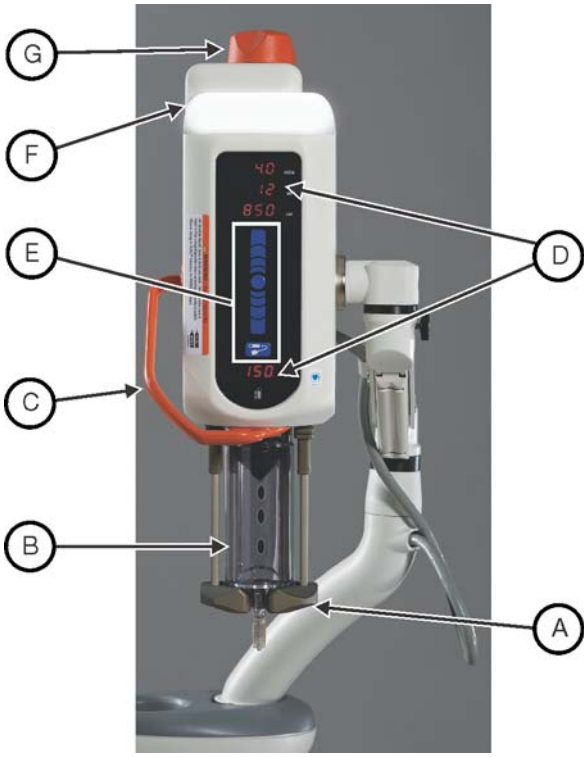

Figure 6 - 1: Injector Head

A	Drop Front	B	Pressure Jacket - See"6.4 - Pressure Jacket"
C	Injector Head Handle.	D	Injector Head Displays - See "6.5 - Injector Head Displays"
E	Injector Head Controls - See "6.6 - Injector Head Controls"	F	Armed Light - See "6.7 - Armed Light"
G	Manual Knob - See "6.8 - Manual Knob"		

6.2 Injector Head Position

The Mark 7 Arterion Injector Head contains a sensor that monitors the head's position: Purge (upright) (X), Intermediate (Y), or Inject (downward) (Z). The head position determines how the data displays and the available functions. Use the handle and the back of the Injector Head (but not the Manual Knob) to rotate the head into position.

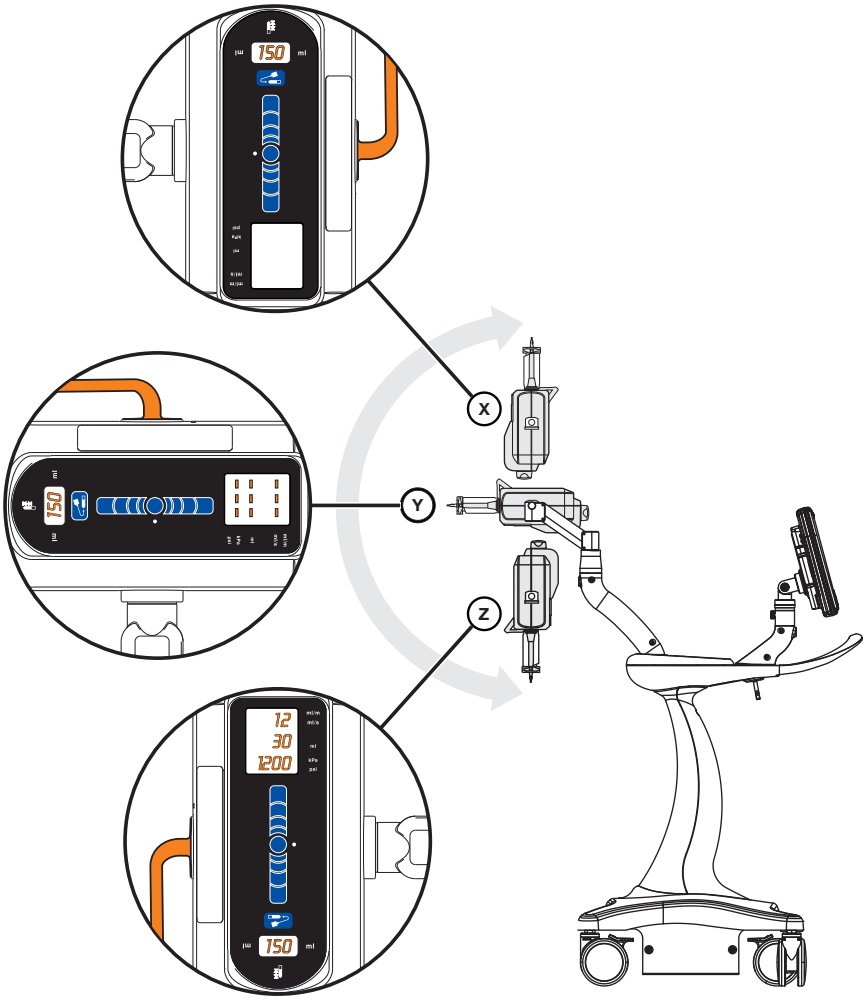

Figure 6 - 2: Injector Head Position

Table 6 - 1: Injector Head Position and Functionality

Functions	Injector Head Position		
	Purge (X)	**Intermediate (Y)**	**Inject (Z)**
Fill	Enabled	Enabled	Enabled
Inject	Disabled	Disabled	Enabled

6.3 Syringe Interface

The syringe interface supports a single 150 mL syringe. Operators can attach a syringe to the head from the front of the injector (front loading). The syringe locks into place when the drop front is fully

closed. An operator can remove the syringe from the piston rod at any point within the normal travel of the piston by rotating the syringe 1/4 turn clockwise, while the Injector Head is powered on or off, and without removing the disposable set from the syringe.

6.3.1 Piston Auto Retract

The Mark 7 Arterion Injection System has an auto retract option that automatically retracts the piston when the Injector Head is in the Purge position. Below are the two scenarios that describe how this feature functions when the Injector Head is in the Purge Position or in the Intermediate and Inject Positions (see "6.2 - Injector Head Position" for a description of the positions).

- **Purge position** - The operator lowers the drop front and removes the syringe. The Injector Head beeps three times and auto-retracts to the syringe ready position.
- **Intermediate and Inject Positions** - The operator lowers the drop front, removes the syringe, and rotates the Injector Head into the Purge (upright) position. The injector Head beeps three times and auto-retracts to the syringe ready position.

NOTE: Press any key on the Injector Head to halt the auto retract.

NOTE: Enable the auto retract feature from the ***Options*** tab. See "5.4 - Options Tab" for more information.

6.4 Pressure Jacket

The Mark 7 Arterion has a Pressure Jacket designed to hold the syringe in place and help to maintain syringe integrity during use.

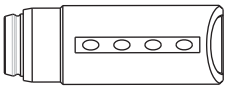

Figure 6 - 3: Pressure Jacket

The Pressure Jacket is manufactured from high impact resistant material; however, sharp impacts such as from dropping, may cause small barely visible cracks to form, which may propagate during subsequent pressure cycles.

6.4.1 Pressure Jacket Storage

When not in use, the Pressure Jacket should remain securely attached to the Injector Head. Alternatively, the Pressure Jacket may be wrapped in a cloth and stored where it will not be hit or dropped.

After each procedure, check the Pressure Jacket for contrast build up. For Pressure Jacket cleaning and maintenance, see "Chapter 14 - Cleaning and Maintenance".

6.5 Injector Head Displays

The Injector Head has two display areas. One area shows the programmed parameters for flow rate, volume, and pressure limit. The other area shows the volume remaining in the syringe.

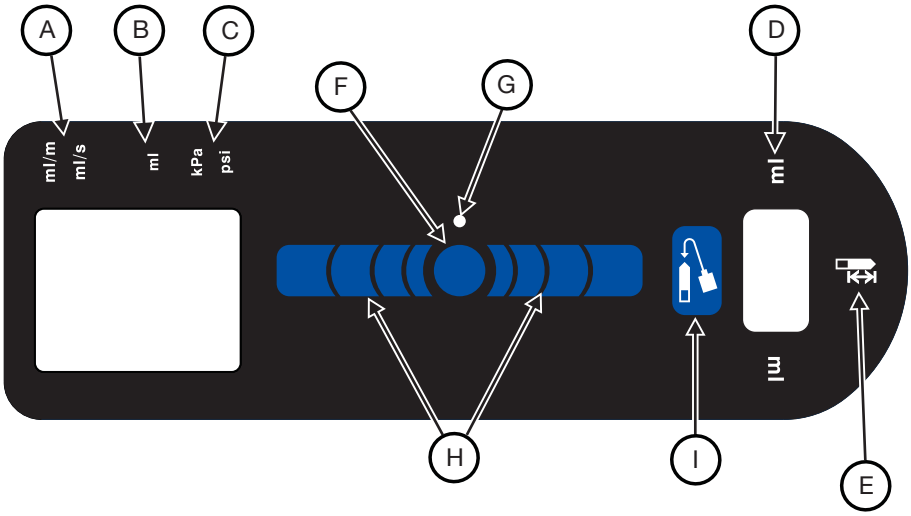

Figure 6 - 4: Injector Head Display

A	Flow Rate	B	Volume
C	Pressure Limit	D	Volume Remaining
E	Volume Remaining Icon	F	Enable Button
G	Enable Indicator	H	Fill Strip
I	Auto-Fill Button		

6.5.1 Flow Rate (A)

The flow rate displays the programmed rate. For Phased protocols, the Injector Head displays the values of the current phase. The flow rate displays in per second or per minute mode based on the protocol parameters. Operators can change the flow rate mode using the ***Options*** tab. See "5.4 - Options Tab" for more information.

6.5.2 Volume (B)

The volume displays the programmed volume in milliliters. For Phased protocols, the Injector Head displays the values of the current phase.

6.5.3 Pressure Limit (C)

The pressure limit indicates the maximum pressure that the system can use to inject contrast for the programmed protocol. The limit displays in either psi or kPa. To understand more about pressure limiting, see "4.2 - Pressure Limiting" or the Display Control Unit ***Help*** Tab.

6.5.4 Volume Remaining (D)

The volume remaining indicates the amount of contrast currently in the syringe.

6.6 Injector Head Controls

The Injector Head Controls on the injection head display contain the **Enable** button, Enable Indicator, **Fill Strip**, and **Auto-Fill** button.

6.6.1 Enable Button (F)

The **Enable** button activates the **Fill Strip** and **Auto-Fill** button. After pressing the **Enable** button, the Enable Indicator (G) illuminates and the **Fill Strip** and **Auto-Fill** button stay active while in use or for five seconds of inactivity.

6.6.2 Fill Strip (H)

The **Fill Strip** allow operators to advance and retract the piston on the Injector Head. After pressing the **Enable** button, press the forward arrows (closest to syringe) to advance the piston, or press the reverse arrows (farthest from syringe) to retract the piston. The piston speed increases progressively as an operator presses the arrows farther away from the **Enable** button.

6.6.3 Auto-Fill Button (I)

The **Auto-Fill** button fills the syringe with a user-defined contrast volume and at a user defined speed. After pressing the **Enable** button, press the **Auto-Fill** button. Configure the volume and speed from the ***Options*** tab. See "5.4 - Options Tab".

6.6.3.1 Auto-Fill Button with 15 mL Purge Configuration Options

Table 6 - 2: 15 mL Purge Configuration Options

15 mL Purge ON	15 mL Purge OFF
Auto-Fill available for use in any Injector position.	**Auto-Fill** only available for use in the Injector's upright position.

6.7 Armed Light

The **Armed Light** (J) remains illuminated when the system is armed. The light flashes once every second when injecting

Figure 6 - 5: Armed Light

6.8 Manual Knob

Use the **Manual Knob** (K) to manually advance or retract the piston. Turn the knob clockwise to advance the piston and counterclockwise to retract the piston.

Figure 6 - 6: Manual Knob

6.9 Syringe Heat Maintainer

The Syringe Heat Maintainer clamps onto the Pressure Jacket and connects to the underside of the Injector Head and is designed to keep pre-warmed contrast in the syringe. For information on installing the Syringe Heat Maintainer, see "15.6.1 - Syringe Heat Maintainer Installation".

6.10 Injector Head Lock-outs

The Injector Head will be locked-out while an operator is accessing a Display Control Unit. LOC displays in the volume remaining.

The Injector Head remains in lock-out until:

1. An operator finishes accessing the active Display Control Unit, and active Display Control Unit displays the Home tab,
2. Or an operator has accessed the active Display Control Unit and doesn't do anything for a minute.

7 Power Up and Shutdown the Injector

This chapter describes:

- "Powering up the System"
- "Shutdown"

7.1 Powering up the System

⚠CAUTION
Electric Shock Hazard - Minor or moderate patient and/ or worker injury may result. • Verify that the voltage and frequency marked on the serial tag on the Power Unit matches the voltage and frequency of the electrical outlet. • Do not use extension cord or power adapter with the system.

1. Press the **Power Switch** on the Power Unit.
2. Open the power switch cover on the Display Control Unit, and press the **Power Switch**. A splash screen and then a safety screen displays.
3. Close the power switch cover.
4. Read the warnings and press **Continue**. The ***Home*** tab displays.

7.2 Shutdown

1. Open the power switch cover on the Display Control Unit, and press the **Power Switch**.
2. Close the power switch cover.
3. Press the **Power Switch** on the Power Unit.

7.3 Emergency Shutdown

⚠CAUTION
Mechanical Hazard - Minor or moderate patient and/ or worker injury may result. • Turn off system power and disconnect patient when system malfunction occurs.

In the event of an emergency such as a fire, explosion, or electrical shock, press the **Power Switch** at either the Display Control Unit or Power Unit, or disconnect the power cord from the wall outlet to shut down the system.

8 Setting and Managing Protocols

⚠WARNING
Over Volume Hazard - Serious patient injury or death may result. • Do not program a protocol outside of the clinically accepted volume range. • Ensure that the correct volume is programmed in the protocol for the target anatomy.
Vessel Dissection Hazard - Serious patient injury or death may result. • Do not program a protocol outside of the clinically accepted flow rate range. • Ensure that the correct flow rate is programmed in the protocol for the target anatomy. • Do not program a protocol outside of the clinically accepted pressure limit. • Ensure that the correct pressure limit is programmed in the protocol for the target anatomy.
Foreign Body Embolism Hazard - Serious patient injury or death may result. • Do not program a pressure greater than the lowest rated disposable's pressure rating.
Bloodborne contamination hazard - Serious patient and/or worker injury or death may result. • Do not program a pressure greater than the lowest rated disposable's pressure rating.

This chapter discusses how to:

- "Set Injection Parameters from the Home Tab"
- "Manage Protocols from the Protocols Tab"

8.1 Set Injection Parameters from the Home Tab

NOTE: Refer to syringe and disposable packaging to confirm lowest pressure rating prior to programing an injection.

8.1.1 Set Injection Parameters on Home Tab - Single

A Single protocol injects a set Volume of contrast at one flow rate, pressure, rise time, and delay time (if using ISI).

NOTE: Delay and rise time are not available for mL/m protocols.

1. Select the ***Single*** tab (A).

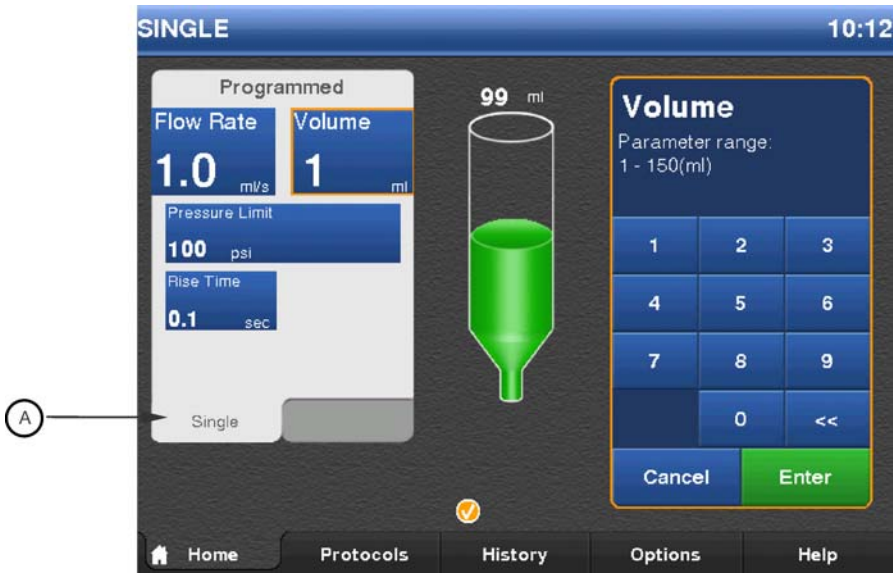

Figure 8 - 1: Set Single Protocol

NOTE: The displayed values are based on the last used protocol or the default values.

2. Select the box corresponding to a parameter to change it.
3. Use the numeric keypad to enter the protocol parameter.
4. Commit the value by selecting **Enter** or another parameter.
5. Select **Delay**. A numeric keypad displays with **X-Ray** and **Inject** buttons.
   a. Enter the delay time. Setting delay time to zero is equivalent to having no delay.
   b. Select **X-Ray** or **Inject**.
   c. Select **Enter** to commit the value.

   NOTE: A programmed delay parameter only functions when using ISI.
6. Repeat steps **2**-**4** to change additional parameters.

8.1.2 Set Injection Parameters on Home Tab - Phased

Phased Protocols have up to four different sets of flow rates and volumes for single continuous injection. Operators can enter up to four phases per protocol. The pressure limit remains consistent for each phase.

NOTE: The initial rise time is dependent on the value the operator enters. The intra-phase rise time is fixed.

NOTE: If the Phased option is not visible, go to the Display Control Unit ***Options*** tab to enable Phased injections. See "5.4 - Options Tab".

NOTE: ISI does not function with Phased protocols.

1. Select the ***Phased*** tab (A).

Figure 8 - 2: Set Phased Protocol

From the **Programmed** window, operators can modify protocol parameters and existing phases, add phases, or delete phases.

- To modify an existing phase, go to step **2**.
- To modify the pressure limit, rise time, or delay, go to step **3**.
- To add a phase, go to step **4**.
- To delete a phase, go to step **5**.

2. To modify values for an existing Phase, select the **Flow Rate** or **Volume** to the right of the index number (B) for that phase.
   a. Select either **Flow Rate** or **Volume**.
   b. Use the numeric keypad to enter the protocol parameter.
   c. Commit the value by selecting **Enter** or another parameter.

d. Repeat this step to change additional parameters.

NOTE: When editing a phase, an operator cannot delete a phase.

3. Select **Pressure Limit** or **Rise Time** to change that parameter.

a. Use the numeric keypad to enter the protocol parameter.
b. Commit the value by selecting **Enter** or another parameter.

4. To add a phase, select the index number (C) for the phase directly below the last entered phase. A new phase is added with flow rate and volume both equal to “1”.

a. In the new phase, select either **Flow Rate** or **Volume**.
b. Use the numeric keypad to enter the protocol parameter.
c. Commit the value by selecting **Enter** or another parameter.
d. Repeat this step to add additional parameters.

5. To delete a phase, select the index number for the phase. If a lower numbered phase is deleted, the higher number remaining phases are renumbered. For example, in a three phase protocol, if Phase 1 is deleted, Phases 2 and 3 become Phases 1 and 2.

NOTE: If values for only one phase exist, that phase cannot be deleted.

8.1.3 Set Injection Parameters on Home Tab - Variable Flow Rate

A Variable Flow Rate protocol injects a set Volume of contrast at a Flow Rate determined by the Hand Controller. As an operator depresses the Hand Controller plunger, the system increases the Flow Rate until it reaches the maximum Flow Rate set by the operator.

NOTE: If the Variable Flow Rate option is not visible, go to the Display Control Unit ***Options*** tab to enable MEDRAD® VFlow. See "5.4 - Options Tab".

NOTE: ISI does not function with Variable Flow Rate protocols.

1. Select the Variable tab (A).

Figure 8 - 3: Set Variable Flow Rate Protocol

NOTE: The displayed values are based on the last used protocol or the default values.

2. Select the box corresponding to a parameter to change it.

3. Use the numeric keypad to enter the protocol parameter.

4. Commit the value by selecting **Enter** or another parameter.

5. Repeat steps 2-4 to change additional parameters.

8.2 Manage Protocols from the Protocols Tab

NOTE: To store, view, or edit mL/m, Phased, or Variable Flow Rate protocols, enable that protocol type from the Display Control Unit ***Options*** tab. See "5.4 - Options Tab". If the mL/m option is enabled, only mL/m protocols display.

8.2.1 Create Protocols

The injection system can store up to 40 protocols. The number of protocols stored on the system displays in the upper right corner of the ***Protocols*** tab. Each protocol stores the volume, flow rate, pressure limit, rise time, and delay.

NOTE: Refer to syringe and disposable packaging to confirm lowest pressure rating prior to programing and injection.

8.2.1.1 Create a New Single mL/s or mL/m Protocol on the Protocols tab

A Single protocol consists of a single volume, flow rate, pressure limit, rise time, and delay.

NOTE: Delay and rise time are not available for mL/m protocols.

1. Select the ***Protocols*** tab.

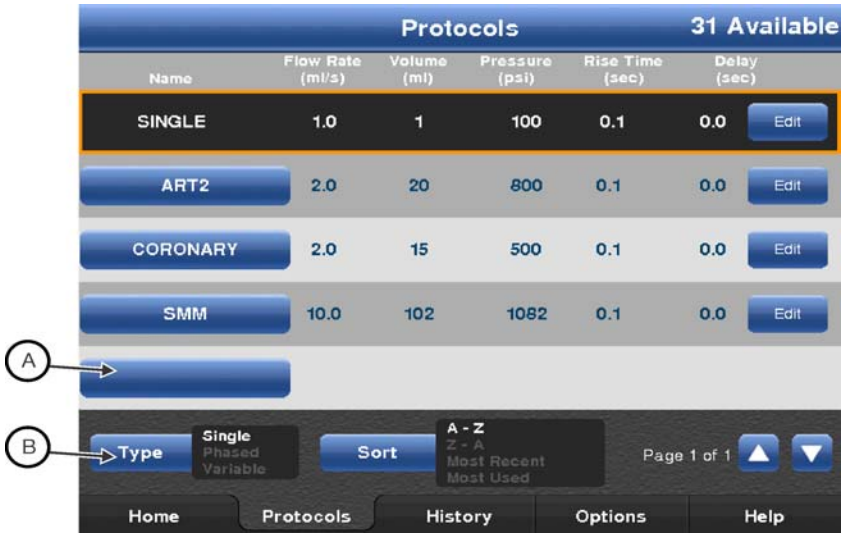

Figure 8 - 4: Protocols Tab - Single Protocols

2. Select the **Type** (B) button until Single is highlighted. A list of Single protocols displays.
3. Select the blank blue button (A).

   NOTE: If a blank button is not visible, scroll through the list of protocols until one displays. If a blank button is not available or ***0*** Available displays in the upper right corner, the system cannot store any more protocols. Delete a protocol to add a new one.

4. Enter the protocol name.
5. Select a parameter and enter the values for the selected parameter.

   NOTE: If an operator tries to commit a value outside of the acceptable range, an audible beep sounds and the parameter range blinks in the keypad.

6. Select a different parameter to commit the values.
7. To enter a delay, select **Delay**.
   a. Enter the delay time. Setting the delay time to zero is equivalent to having no delay.
   b. Select **X-Ray** or **Inject**.

   NOTE: A programmed delay parameter only functions when using ISI.

8. Select **Save**.

8.2.1.2 Create a New Phased mL/s Protocol on the Protocols tab

Phased protocols consist of multiple phases of Volumes and flow rates with a single pressure limit and rise time.

NOTE: ISI does not function with Phased protocols.

1. Select the ***Protocols*** tab.

Figure 8 - 5: Protocols Tab - Phased Protocols

2. Select the **Type (B)** button until Phased is highlighted. A list of Phased protocols displays.

   NOTE: If the **Phased** button on the ***Protocols*** tab is not displayed, go to the ***Options*** tab to enable Phased Protocol. See "5.4 - Options Tab" for more information.

3. Select the blank blue button (A).

   NOTE: If a blank button is not visible, scroll through the list of protocols until one displays. If a blank button is not available or “0 Available” displays in the upper right corner, the system cannot store any more protocols. Delete a protocol to add a new one.

4. Enter the protocol name.
5. To enter phases:
   a. Select **Volume** or **Flow Rate**. Phase 1 displays with default values.
   b. Select **Volume** or **Flow Rate** for Phase 1 to modify the settings.

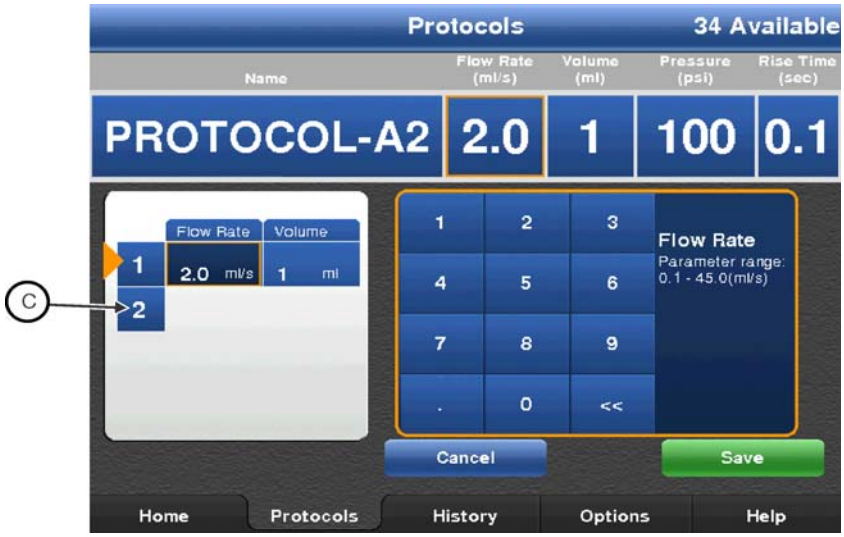

Figure 8 - 6: Index Number

c. To enter a new phase, select an empty index number (C). A new phase is added with default values for flow rate and volume.

d. Enter the phase values, as needed

NOTE: The currently selected values update in the top row parameters. The value in the Phased Selection pane does not update until the value is committed.

e. To commit the values, select a different parameter.

f. Repeat this step for each phase to be added.

6. Select **Pressure** or **Rise Time**.

a. Enter the parameter values.

b. To commit the values, select a different parameter.

c. Repeat this step for each parameter to be set.

NOTE: The operator enters the initial rise time. The intra-phase rise time is fixed.

7. Select **Save**.

8.2.1.3 Create a New Variable Flow Rate Protocol on the Protocols tab

A Variable Flow Rate protocol injects a set Volume of contrast at a Flow Rate determined by the Hand Controller. As an operator depresses the Hand Controller plunger, the system increases the flow rate until it reaches the maximum Flow Rate set by the operator.

NOTE: If the Variable Flow Rate option is not visible, go to the Display Control Unit ***Options*** tab to enable MEDRAD VFlow. See "5.4 - Options Tab".

NOTE: ISI does not function with Variable Flow Rate protocols.

1. Select the ***Protocols*** tab.

2. Select the **Type** button until Variable is highlighted. A list of Variable Flow Rate protocols displays.

Figure 8 - 7: Protocols Tab - Variable Flow Rate Protocols

3. Select the blank blue button (A).

   NOTE: If a blank button is not visible, scroll through the list of protocols until one displays. If a blank button is not available or ***0*** Available displays in the upper right corner, the system cannot store any more protocols. Delete a protocol to add a new one.

4. Enter the protocol name.
5. Select a parameter and enter the values for the selected parameter.

   NOTE: If an operator tries to commit a value outside of the acceptable range, an audible beep sounds and the parameter range blinks in the keypad.

6. Select a different parameter to commit the values.
7. Select **Save**.

8.2.2 Recall a Stored Protocol

An operator can recall a protocol for use, view the parameters, edit the parameters, or delete the protocol.

1. Select the ***Protocols*** tab. The currently selected protocol (A) on the ***Home*** tab displays at the top of the list.

Figure 8 - 8: Active Protocol

2. Select the **Type** button to display the type of protocol to be recalled.
3. Select the **Sort** button to sort the protocols. The options are:
   - Sort A-Z
   - Sort Z-A
   - Most Frequently Used
   - Most Recently Used
4. Press the up or down arrow to locate the protocol.
5. Select the protocol name to load the protocol for use. The system returns to the ***Home*** tab with the selected protocol parameters displayed.

8.2.3 Edit an Existing Protocol

8.2.3.1 Edit Single ml/s or ml/m or Variable Flow Rate Protocol

1. If in the Armed state, select **Disarm**.
2. Select the ***Protocols*** tab.
3. Select the **Type** button to display the protocol type to be edited.

   NOTE: If the Variable Flow Rate type is not displayed, go to the **Options** tab to enable MEDRAD® VFlow. See "5.4 - Options Tab".
4. Navigate to the desired protocol.
5. Select the **Edit** button.
6. Select a parameter to change it.
7. Use the keypad to enter the new values.
8. Commit the value by selecting **Enter** or another parameter.

8.2.3.2 Edit Phased mL/s Protocol

1. If in the Armed state, select **Disarm**.
2. Select the ***Protocols*** tab.
3. Select the **Type** button to display the protocol type to be edited.

   NOTE: If the **Phased** type is not displayed, go to the ***Options*** tab to enable Phased Protocol. See "5.4 - Options Tab".
4. Navigate to the desired protocol.
5. Select the **Edit** button.
6. To edit phases:
   a. Select a parameter. The phased protocol displays.
   b. Locate the phase to be edited.
   c. Select a parameter, such as **Volume** or **Flow Rate**.
   d. Use the keypad (A) to enter the values for the selected parameter.

Figure 8 - 9: Edit Phased Protocols

e. To commit the values, select a different parameter.
f. Repeat steps **b** through **e** for each parameter to be edited.

7. To add phases:
- **a.** Select an empty index number (B) for the phase. A new phase is added with Flow Rate and Volume both equal to “1”and Flow Rate is selected.
- **b.** Edit **Flow Rate** or select another parameter.
- **c.** Use the keypad (A) to enter the values for the selected parameter.
- **d.** To commit the values, select a different parameter.

8. To delete a phase, select the index number for the phase. If a lower numbered phase is deleted, the higher number remaining phases are renumbered. For example, in a three phase protocol, if Phase 1 is deleted, Phases 2 and 3 become Phases 1 and 2.

9. To edit the Pressure Limit or Rise Time select the corresponding box.
- **a.** Enter the values for the selected parameter.
- **b.** To commit the values, select a different parameter.
- **c.** Repeat this step for each parameter to be edited.

10. Select **Save**.

8.2.4 Delete a Protocol

NOTE: An operator cannot delete a protocol, if it is active on the ***Home*** tab.

1. Select the ***Protocols*** tab.

2. Select the **Type** button to display the protocol type to be deleted.

3. Navigate to the desired protocol using the page arrows or sort button.

4. Select the **Edit** button for the protocol to be deleted.

5. Select **Delete**.

6. Select **Yes** on the confirmation popup to delete the protocol.

9 Preparing for Injection

⚠WARNING
Cross Contamination Hazard - Serious patient and/or worker injury or death may result. • Do not re-use disposables
Foreign Body Embolism Hazard - Serious patient injury or death may result. • Follow contrast manufacturer recommendations for contrast use. • Ensure that contrast has not crystallized in the system prior to use.
Thrombus Hazard - Serious patient injury or death may result: • Do not leave injector system attached to a static fluid system for an extended period of time.

⚠CAUTION
Environmental Contamination Hazard - Minor or moderate patient and/ or worker injury may result. • Properly discard disposables after use, in accordance with hospital hazard waste disposal procedures. • Do not store contrast media in syringe. • Follow contrast manufacturer recommendations for contrast use.

This chapter describes:

- "Installing the Mark 7 Arterion or Twist & Go Syringe"
- "Filling and Purging the Mark 7 Arterion or Twist & Go Syringe"
- "Installing and Purging Standard High Pressure Connector Tubing"
- "Installing and Purging Twist & Go HPCT"
- "Installing the MEDRAD® VFlow Hand Controller"
- "Connecting to and Purging the Catheter"
- "Enabling 15 mL Purge Feature and Choosing Configuration Options"
- "Defining a Protocol"
- "Turning ISI On or Off"

9.1 Installing the Mark 7 Arterion or Twist & Go Syringe

⚠WARNING
Air Embolism Hazard - Serious patient injury or death may result. • Ensure that patient is not connected while purging air from syringe, or engaging or advancing plunger. • Inspect Pressure Jacket and replace when signs of damage are evident.
Environmental Contamination Hazard - Minor or moderate patient and/ or worker injury may result. • Visually inspect contents and package before use. • Do not use if package integrity is compromised.
Cross Contamination Hazard - Serious patient and/or worker injury or death may result. • Use caution when removing air from the syringe. Component damage may result from the use of tools during air removal. • Do not store filled syringes for later use.
Bloodborne Contamination Hazard- Serious patient and/or worker injury or death may result. • Ensure only syringes from Bayer are used on the system.

⚠CAUTION

Environmental Contamination Hazard - Minor or moderate patient and/ or worker injury may result.

- Visually inspect contents and package before use.
- Do not use disposables past Use By date identified on the package.
- Do not use if package integrity is compromised.
- Follow sterile technique principles, specifically, maintain sterility of the syringe tip, plunger, syringe barrel internal surface, and Quick Fill Tube.
- Do not scrape off dried, potentially contaminated contrast into the head cavity during syringe installation.
- Do not reuse disposables.

Prior to installing a syringe, ensure that the system is on and the pressure jacket is installed.

1. Ensure the syringe piston is fully retracted. To retract the piston, press the **Enable** button (A), and then press reverse arrows (B) on the **Fill Strip** (C).

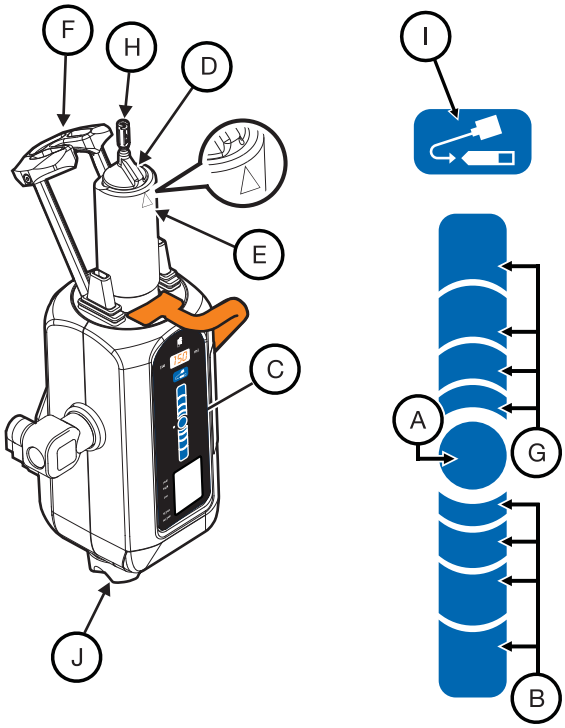

Figure 9 - 1: Install Syringe

NOTE: Your finger placement on the **Fill Strip** determines the speed at which the syringe retracts or advances. Move your finger farther from the **Enable** button to increase the speed.

2. Open the syringe package and remove the syringe.
3. Insert the syringe in the Pressure Jacket. Install the syringe with the raised syringe alignment key (D) aligned with the triangle (E) on the Pressure Jacket.
4. Maintain syringe tip sterility, and raise and completely close the drop front (F).
5. On the Injector Head, press the **Enable** button, and then press the forward arrows (G) on the **Fill Strip** to fully advance the plunger in the syringe.

9.2 Filling and Purging the Mark 7 Arterion or Twist & Go Syringe

⚠WARNING

Air Embolism Hazard - Serious Patient Injury or Death May Result.

- Ensure that one operator is designated as being responsible for filling and refilling the syringe. Do not change operators during the procedure. If an operator change must occur, ensure that the new operator verifies that the fluid path is purged of air.
- Ensure that patient is not connected while purging air from syringe, or engaging or advancing plunger.
- Orient the Injector head to the Purge (upright) position during filling of syringe and purging of air.
- Purge all air out of syringe and any and all disposables after filling.
- Tap syringe after filling to facilitate air removal.
- Verify that the MEDRAD® FluiDots indicators are rounded to ensure that fluid is present in the syringe.

Bloodborne Contamination Hazard - Serious patient and/or worker injury or death may result.

- Do not grasp the drop front, pressure jacket, or syringe to rotate the Injector Head.

Cross Contamination Hazard - Serious patient and/or worker injury or death may result.

- Use caution when removing air from the syringe. Component damage may result from the use of tools during air removal.

⚠CAUTION

Environmental Contamination Hazard - Minor or moderate patient and/ or worker injury may result.

- Follow sterile technique principles, specifically, maintain sterility of the syringe tip, plunger, syringe barrel internal surface, and Quick Fill Tube.

Operators can fill a syringe using the **Fill Strip** or the **Auto-Fill** button.

1. Use the handle and the back of the Injector Head (but not the Manual Knob) to rotate the Injector Head to the Purge (upright) position.
2. Remove the Quick Fill Tube from the syringe package.
3. Remove the dustcap from the syringe tip and set aside maintaining sterility.
4. Attach the short end of the Quick Fill Tube to the syringe tip.

   NOTE: The Quick Fill Tube can be attached without repositioning the FasTurn nut (H) (Mark 7 Arterion Syringe only) attached to the syringe tip.
5. Insert the long end of the Quick Fill Tube into the fluid source (usually contrast media). Raise the contrast bottle until the Quick Fill Tube is fully inserted into the contrast.

   NOTE: Use a Quick Fill Tube or equivalent device to reduce the volume and size of air bubbles drawn into the syringe during filling. It is more difficult to remove the air bubbles if you use smaller diameter tubes or a tube longer than 10 in. (25 cm.)
6. On the Injector Head, press the **Enable** button (A), and then press and hold the reverse arrows (B) on the **Fill Strip** (C) until the system fills the syringe with the desired contrast volume.
   - Alternatively, on the Injector Head, press the **Enable** button and then press and release the **Auto-Fill** button (I). The Mark 7 Arterion fills the syringe with the preconfigured contrast volume at the preconfigured speed. The volume and speed are configured from the Display Control Unit ***Options*** tab.
7. If required, use your free hand to gently tap the base of the Pressure Jacket to facilitate migration of air bubbles remaining within the syringe and on the syringe plunger to the syringe tip.

8. Carefully observe the MEDRAD® FluiDots indicators to ensure that fluid is present in the syringe. Verify that the MEDRAD® FluiDots indicators are round in the filled portion of the syringe. The rounded shape of the MEDRAD® FluiDots indicators varies according to the type of contrast media, but an oblong shape indicates the presence of air. Rounded MEDRAD® FluiDots indicators do not indicate the total absence of air bubbles in the syringe tip.

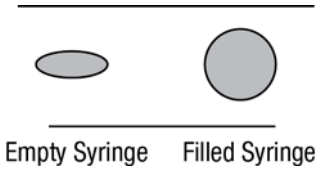

Figure 9 - 2: MEDRAD® FluiDots Indicators

9. Purge all air out of syringe after filling. Turn the Manual Knob (J) clockwise to remove air from the syringe.
10. Visually confirm that all air bubbles have been removed from the syringe. Tap syringe after filling to facilitate air removal.
11. Remove the Quick Fill Tube from the syringe tip.
12. The system is ready to accept installation of the High Pressure Connector Tubing (HPCT). If you are not installing the HPCT at this time, replace the sterile dustcap.

NOTE: Refer to "4.4 - High Pressure Connector Tubing Specifications (Non-Twist & Go)" for high pressure connector tubing specifications.

9.3 Installing and Purging Standard High Pressure Connector Tubing

⚠WARNING

Air Embolism Hazard - Serious patient injury or death may result.

- Securely tighten the high pressure connector tubing to syringe connection. Component damage may result from the use of tools during tightening.
- Remove all air from the high pressure connector tubing.
- Use caution when removing air from the syringe or tubing connections. Component damage may result from the use of tools during air removal.
- Ensure that patient is not connected while purging air from high pressure connecting tubing, or engaging or advancing plunger.

Bloodborne Contamination Hazard - Serious patient and/or worker injury or death may result.

- Securely tighten the high pressure connector tubing to syringe connection. Component damage may result from the use of tools during tightening.
- Use caution when removing air from the syringe or tubing connections. Component damage may result from the use of tools during air removal.
- Avoid contact of and damage to syringe tip, tubing, and connections when manipulating injector position.
- Do no reuse disposables.
- Do not exceed pressure identified on the disposable packaging.

⚠CAUTION

Environmental Contamination Hazard - Minor or moderate patient and/or worker injury may result.

- Follow sterile technique principles, specifically, maintain sterility of the syringe tip and the high pressure connector tubing.
- Do not reuse disposables.

NOTE: Refer to "4.4 - High Pressure Connector Tubing Specifications (Non-Twist & Go)" for high pressure connector tubing specifications.

1. Remove the Dust cap from the syringe tip if attached.
2. Insert the high pressure connector tubing into FasTurn nut (H) on the Mark 7 Arterion Syringe.
3. Turn the FasTurn nut clockwise to securely tighten the high pressure connector tubing to the syringe tip.
4. Purge all air from the high pressure connector tubing. Turn the Manual Knob clockwise to push contrast out until all of the air bubbles have been removed from the high pressure connector tubing. Gentle tapping at any connection point may be needed to facilitate air removal.

   NOTE: Ensure at least 3.5mL of fluid has been purged.
5. Rotate the head to the downward position prior to arming and injecting. Do not grasp the drop front, pressure jacket, syringe or tubing to rotate the injector head.

9.4 Installing and Purging Twist & Go HPCT

⚠WARNING

Air Embolism Hazard - Serious patient injury or death may result.

- Securely tighten the high pressure connector tubing to syringe connection. Component damage may result from the use of tools during tightening.
- Remove all air from the high pressure connector tubing.
- Use caution when removing air from the syringe or tubing connections. Component damage may result from the use of tools during air removal.
- Ensure that patient is not connected while purging air from high pressure connecting tubing, or engaging or advancing plunger.

Bloodborne Contamination Hazard - Serious patient and/or worker injury or death may result.

- Securely tighten the high pressure connector tubing to syringe connection. Component damage may result from the use of tools during tightening.
- Use caution when removing air from the syringe or tubing connections. Component damage may result from the use of tools during air removal.
- Avoid contact of and damage to syringe tip, tubing, and connections when manipulating injector position.
- Do no reuse disposables.
- Do not exceed 1200 PSI.
- Use only Twist & Go High Pressure Connector Tubing with the Twist & Go Syringe.

⚠CAUTION

Environmental Contamination Hazard - Minor or moderate patient and/or worker injury may result.

- Follow sterile technique principles, specifically, maintain sterility of the syringe tip and the high pressure connector tubing.
- Do not reuse disposables.

NOTE: Use Twist & Go HPCT only with Twist & Go Syringes.

1. Remove the dust cap from the syringe tip if attached.
2. Insert the Twist & Go High Pressure Connector Tube onto the Twist & Go syringe tip.

Figure 9 - 3: Twist & Go Connection

3. Turn the (A) Luer nut clockwise to securely tighten the high pressure connector tubing to the syringe tip (B).
4. Purge all air from the high pressure connector tubing. Turn the Manual Knob clockwise to push contrast out until all of the air bubbles have been removed from the High Pressure Connector Tube. Gentle tapping at any connection point may be needed to facilitate air removal.

9.5 Installing the MEDRAD® VFlow Hand Controller

1. Ensure that the injector is in the disarmed state.
2. Open the hand controller bag using sterile technique.
3. Using sterile technique, remove the hand controller from the bag.
4. Plug the hand controller into the underside of the Injector Head (see drawing below). Listen for an audible “click” to confirm proper connection.

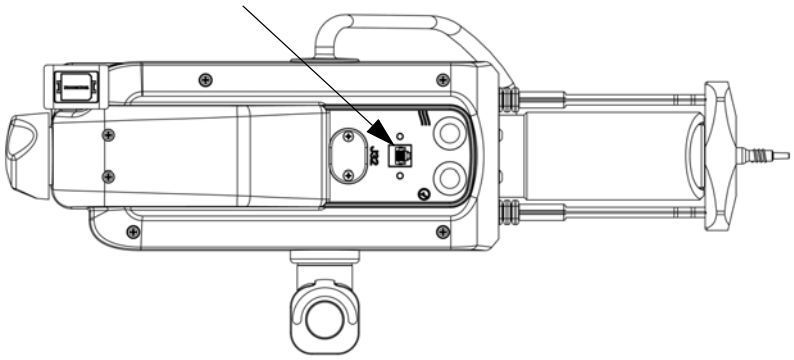

Figure 9 - 4: Hand Controller Connector

NOTE: If the hand controller is damaged or does not work properly, discontinue use and discard.

9.6 Connecting to and Purging the Catheter

⚠WARNING

Air Embolism Hazard - Serious patient injury or death may result.

- Advance the piston prior to connection between the high pressure connector tubing and a catheter or other non-Bayer disposables including administration sets and additions to administration sets, such as but not limited to bleed back control devices and pressure transducers.
- Aspirate via the manual knob when connecting to the high pressure connector tubing and a catheter or other non-Bayer disposables including administration sets and additions to administration sets, such as but not limited to bleed back control devices and pressure transducers to ensure all air has been removed from the fluid path.
- Securely tighten the catheter to high pressure connector tubing connection to the catheter or other non-Bayer disposables including administration sets and additions to administrations sets, such as but not limited to bleed back control devices and pressure transducers to ensure all air has been removed from the fluid path.
- Do not inject air.
- Purge all air from syringe and disposables before connecting or injecting to patient.

Bloodborne Contamination Hazard - Serious patient and/or worker injury or death may result.

- Securely tighten the catheter to high pressure connector tubing connection to catheter or other non-Bayer disposables including administration sets and additions to administration sets, such as but not limited to bleed back control devices and pressure transducers to ensure all air has been removed from the fluid path.
- Do not grasp the drop front, pressure jacket, or syringe to rotate the Injector Head.

Thrombus Hazard - Serious patient injury or death may result:

- Do not pull excessive blood back into syringe.

⚠CAUTION

Environmental Contamination Hazard - Minor or moderate patient and/or worker injury may result.

- Follow sterile technique principles, specifically, maintain sterility of the high pressure connector tubing, catheter, and other connection points.

This section assumes that the catheter has already been inserted into the patient and that air has been removed from the high pressure connector tubing as outlined in "9.3 - Installing and Purging Standard High Pressure Connector Tubing" or "9.4 - Installing and Purging Twist & Go HPCT".

1. Use the handle and the back of the Injector Head (but not the Manual Knob or tubing) to rotate the Injector Head to the Inject (downward) position.
2. Secure the catheter hub in one hand and the distal rotating luer of the HPCT in the other hand.
3. Advance the piston using the Manual Knob prior to connecting the high pressure connector tubing to a catheter or other non-Bayer disposables including administration sets and additions to administration sets, such as but not limited to bleed back control devices and pressure transducers.
4. Securely tighten the high pressure connector tubing connection to the catheter or other non-Bayer disposables including administration sets and additions to administration sets, such as but not limited to bleed back control devices and pressure transducers.
5. Aspirate via the manual knob when connecting to the high pressure connector tubing and a catheter or other non-Bayer disposables including administration sets and additions to administration sets, such as but not limited to bleed back control devices and pressure transducers to ensure all air has been removed from the fluid path.

6. Stop aspirating with manual knob once blood is visualized in the high pressure connector tubing.
7. Verify that there no air is in the high pressure connector tubing.
   a. If there is air in the tubing, disconnect from patient, remove air, and try fluid to fluid connection again.
8. Once it has been established that all air has been removed, turn the Manual Knob clockwise to clear blood from high pressure connector tubing.

   The system is ready to define protocols or arm.

9.7 Enabling 15 mL Purge Feature and Choosing Configuration Options

The operator can choose between two different configurations (**ON** or **OFF**) of the 15 mL Purge Option.

NOTE: Access the 15 mL Purge Configurations (**ON** or **OFF**) from the ***Options*** menu.

NOTE: Default configuration upon power-up is 15 mL Purge **ON**.

9.7.1 15 mL Purge ON

- The system will require a purge of 3.5 mL or more with the Injector in the upright position with a plunger retraction of 15 mL or more, regardless of whether the Injector head is in the upright or downward position.
- The system will **NOT** require a purge in the upright position with a plunger retraction of less than 15 mL, regardless of whether the Injector head is in the upright or downward position.
- **Auto-Fill** will remain available for use with 15 mL Purge turned **ON**.
- With 15 mL Purge turned **ON**, the system will require a purge in the upright position during system power-up, syringe installation, and new case.

NOTE: The operator can still choose to purge prior to arming, if desired, with a plunger retraction of less than 15 mL but the system will not require it.

9.7.2 15 mL Purge OFF

- The system will require a purge of 3.5 mL or more in the Injector's upright position **ONLY** with a plunger retraction of 15 mL or more in the Injector's upright position.
- **Auto-Fill** will be available for use **ONLY** in the Injector's upright position.
- With 15 mL Purge turned **OFF**, the system will require a purge in the upright position during system power-up, syringe installation, and new case.

NOTE: The operator can still choose to purge, if desired, with a plunger retraction of less than 15 mL and/or upon plunger retraction in the Injector's downward position.

Table 9 - 1: 15 mL Purge Configuration Options (ON or OFF)

	15 mL Purge ON		**15 mL Purge OFF**	
	≥15 mL Plunger Retraction	**<15 mL Plunger Retraction**	**≥15 mL Plunger Retraction**	**<15 mL Plunger Retraction**
Arming Requirements	**MUST** purge 3.5 mL or more with Injector in upright position	**NOT REQUIRED** to purge	**MUST** purge 3.5 mL or more **ONLY** when retraction occurs in Injector's upright position	**NOT REQUIRED** to purge

Table 9 - 1: 15 mL Purge Configuration Options (ON or OFF)

	15 mL Purge ON	15 mL Purge OFF
	Auto-Fill remains available for use	**Auto-Fill** only available in Injector's upright position
	NOTE: Operator can still choose to purge prior to arming, if desired, with plunger retraction of < 15 mL but system will not require it	**NOTE:** Operator can still choose to purge, if desired, with plunger retraction of < 15 mL and/or upon plunger retraction in Injector's downward position

NOTE: With 15 mL Purge turned **ON** or **OFF**, the system will require a purge in the upright position during system power-up, syringe installation, and new case.

9.8 Defining a Protocol

Recall a protocol from the ***Protocols*** tab or set a protocol from the ***Home*** tab. For more information, see "Chapter 8 - Setting and Managing Protocols".

The Injector is ready to be armed. For more information, refer to "Chapter 10 - Arming and Injecting".

9.9 Turning ISI On or Off

NOTE: To use ISI, ISI must be enabled from the ***Options*** tab and turned on from the ***Home*** tab.

1. Select the Single tab.

NOTE: If the ***ISI*** On/Off buttons are not available, confirm the ISI has been enabled on the ***Options*** tab.

NOTE: The ***ISI*** tab is not available for ml/m, Phased, or Variable Flow Rate protocols.

2. Select **On** or **Off**. The ISI symbol (A) indicates that ISI is on.

Figure 9 - 5: ISI Enabled

10 Arming and Injecting

⚠WARNING

Vessel Dissection Hazard - Serious patient injury or death may result.

- Do not move injector head or pedestal while catheter is connected to patient.

This chapter discusses:

- "Purged Air Confirmation"
- "Arming the Injector"
- "Performing an Injection"
- "Completing an Injection"
- "Refilling Syringe During a Procedure"

10.1 Purged Air Confirmation

⚠WARNING

Air Embolism Hazard - Serious patient injury or death may result.

- Do not inject air.
- Purge all air from syringe and disposables before connecting or injecting to patient.
- Verify that the MEDRAD® FluiDots indicators are rounded to ensure that fluid is present in the syringe.

Before arming, the system prompts the operator to confirm that air has been purged from the syringe and disposable set. Once in the armed stated, the system will not prompt the operator to check for air unless the operator performs an action that may introduce air into the disposable set, such as opening the drop front or a powered reverse piston movement. It is the operator's responsibility to successfully purge all air from the system.

The Purged Air Confirmation icon displays on the Display Control Unit after the operator confirms air is expelled from syringe and disposable set. The icon remains active until the system requires the operator to re-check for air.

10.2 Arming the Injector

⚠WARNING

Air Embolism Hazard - Serious patient injury or death may result.

- Do not inject air.
- Purge all air from syringe and disposables before connecting or injecting to patient.
- Use only accessories and options provided by Bayer which are designed specifically for the injection system.
- Inspect system and do not use when signs of damage are evident.
- Verify that the MEDRAD® FluiDots indicators are rounded to ensure that fluid is present in the syringe.
- Use the handle and the back of the Injector Head (but not the Manual Knob or tubing) to rotate the head to the Inject (downward) position prior to arming and injecting.
- Avoid contact of and damage to syringe tip, tubing, and connections when manipulating injector position.

This section describes how to arm in arm single mode and arm multi mode.

Before an operator performs the arming process, the Sentinel window displays messages to indicate any remaining tasks that need to be performed to complete the arming process:

- a syringe is present.
- the Injector Head is in the Inject (downward) position.
- the drop front is closed.
- a purge has been completed.

The system removes the messages as each task is performed.

Operators cannot change the protocol parameters from the ***Home*** tab or ***Protocols*** tab when in the armed state.

10.2.1 Arm Single Mode

NOTE: The term start switch is used in this section to refer to the handswitch, footswitch or hand controller.

The Arm Single mode is used in Single (mL/s and mL/m) protocols and Phased protocols. This mode allows for one injection.

Single and Phased mL/s Injection: The injection starts when the operator presses and holds the start switch.

Single mL/m Injection: The injection starts when the operator presses the start switch.

1. Select the ***Home*** tab.
2. **Single mL/s protocols**: select **Arm Single (A)**.

Figure 10 - 1: Single Arm

Single mL/m and Phased protocols: select **Arm** (B).

Figure 10 - 2: Phased protocol

3. Visually confirm that all air has been purged from the syringe and disposable set, and select **Yes**.

   NOTE: There is sufficient volume remaining in the syringe. For Single mL/s and mL/m protocols with insufficient volume remaining in the syringe for the programmed protocol, the system gives the option of overriding the programmed volume and using the available volume remaining. If the operator selects **Yes**, the system arms with the new programmed volume. If the operator selects **No**, the system will not arm. Adjust the protocol volume to be equal or less than the volume remaining in the syringe. For Phased protocols with insufficient volume remaining in the syringe for the programmed protocol, the system will not arm.

   NOTE: If the injector is set in the mL/m mode, a confirmation popup displays confirming that the injection will be performed using mL/m.

   NOTE: The system stays armed until:

   - the operator presses **Disarm**.
   - any Injector Head button is pressed.
   - a reverse piston motion of greater than 2 mL occurs via the Manual Knob.
   - the drop front is lowered.
   - the Injector Head is rotated out of the Inject position.
   - a start switch is connected or disconnected.
   - a 30 minute time-out occurs.
   - ISI signals a disarm.

4. The Armed Light illuminates solid and the system is ready for injection. For more information, refer to "10.3-Performing an Injection"

10.2.2 Arm Multi Mode

NOTE: The term start switch in this section is used to refer to the handswitch, footswitch or hand controller.

The Arm Multi mode is available only for Single mL/s and Variable Flow Rate protocols. This mode allows for multiple injections per arming sequence. An injection starts when the operator presses and holds the start switch. After each injection, the system re-arms if all of the system tests described in step **3** below pass.

1. Select the ***Home*** tab.
2. **Single mL/s protocols**: select Arm Multi (A). **Variable Flow Rate protocols**: select Arm (B).

Figure 10 - 3: Arm Multi

Figure 10 - 4: Arm Variable

3. Visually confirm that all air has been purged from the syringe and disposable set, and select **Yes**.

NOTE: There is sufficient volume remaining in the syringe. If there is not sufficient volume remaining in the syringe for the programmed protocol, the system gives the option of overriding the programmed volume and using the available volume remaining. If the operator selects **Yes**, the system arms with the new programmed volume. If the operator selects **No**, the system will not arm. The operator needs to adjust the protocol Volume equal to or less than the volume remaining in the syringe.

NOTE: The system will stay armed until:

- the user presses **Disarm**.
- any Injector Head button is pressed.
- a reverse piston motion of greater than 2 mL occurs via the manual knob.
- the drop front is lowered.
- the head is rotated out of the Inject position.
- a start switch is connected or disconnected.
- a 30 minute time-out occurs.
- ISI signals a disarm.

4. The Armed Light illuminates solid and the system is ready for injection. For more information, refer to "10.3-Performing an Injection".

10.3 Performing an Injection

The MEDRAD® Mark 7 Arterion Injection System can perform Fixed Flow Rate and Variable Flow Rate injections. For Fixed Flow Rate, Arm Single mode injections, the injector disarms after the injection is complete or an operator releases the handswitch, footswitch, or Imaging System start switch. For Fixed Flow Rate, Arm Multi mode injections and Variable Flow Rate injections, the injector remains armed until one of the disarm criteria are met.

NOTE: Ensure the fluid path is open before performing an injection.

10.3.1 Performing a Single mL/s Injection in Arm Single Mode

NOTE: The term start switch in this section is used to refer to the handswitch, footswitch or hand controller.

1. Press and hold the start switch to start the injection, and continue holding until the injection is complete.
   The system stops injecting and disarms when:
   - the programmed volume is delivered, or
   - the operator releases the start switch, or
   - the operator presses the Display Control Unit screen or Injector Head controls.

   During the injection, the Injection Indicator displays below the syringe graphic and the Armed Light flashes.
2. Go to "10.4-Completing an Injection".

10.3.2 Performing a Single mL/m Injection in Arm Single Mode

NOTE: The term start switch in this section is used to refer to the handswitch, footswitch or hand controller.

1. Press and release the start switch to start the injection.
   The system stops injecting and disarms when:
   - the programmed volume is delivered, or
   - the operator presses and releases the start switch again, or
   - the operator presses the Display Control Unit screen or Injector Head controls.

   During the injection, the Injection Indicator displays below the syringe graphic and the Armed Light flashes.
2. Go to "10.4-Completing an Injection".

10.3.3 Performing a Single mL/s or Variable Flow Rate Injection in Arm Multi Mode

NOTE: The term start switch in this section is used to refer to the handswitch, footswitch or hand controller.

1. Press and hold the start switch to start the injection, and continue holding until the injection is complete.
   The system stops injecting and remains armed when:

- the programmed volume is delivered and the volume remaining in the syringe is sufficient to perform another injection, or
- the operator release the start switch and the volume remaining in the syringe is sufficient to perform another injection, or
- the operator presses and release another start switch connected to the system and the volume remaining in the syringe is sufficient to perform another injection.

The system disarms when:

- the operator releases the start switch and the volume remaining in the syringe is insufficient to perform another injection, or
- the operator presses and releases another start switch and the volume remaining in the syringe is in-sufficient to perform another injection, or
- the operator presses the Display Control Unit screen or Injector Head controls.

During the injection, the Injection Indicator displays below the syringe graphic and the Armed Light flashes.

2. Repeat step step **1** to perform additional injections.
3. Go to"10.4-Completing an Injection".

10.3.4 Performing a Phased Injection

NOTE: The term start switch in this section is used to refer to the handswitch, footswitch or hand controller.

1. Press and hold the start switch to start the injection, and continue holding until the injection is complete. The system injects the contrast per the parameters for each phase.
   The system stops injecting and disarms when:
   - the programmed volume is delivered, or
   - the operator releases the start switch, or
   - the operator presses and releases another start switch connected to the system, or
   - the operator presses the Display Control Unit screen or Injector Head controls.

   During the injection, the Injection Indicator displays below the syringe graphic and the Armed Light flashes.
2. Go to "10.4-Completing an Injection".

10.3.5 Performing an Injection with Imaging System Interface (ISI)

NOTE: To use ISI, it must enabled from the ***Options*** tab and turned on from the ***ISI*** tab.

The functionality of the Injector handswitch or footswitch and the Imaging System start switch is determined by the interconnecting cable and the configuration within the Imaging System. The order in which the systems are initiated determines whether an injection occurs, an X-ray occurs, or neither. The typical operating scenarios are described in the following tables. Consult with the Field Engineer for the Imaging System to confirm its internal configuration.

The tables in the subsections below show the Imaging Systems covered in this section and how each functions with the Mark 7 Arterion Injection System***.***

NOTE: Call Bayer to determine compatibility of other Imaging Systems.

NOTE: The Bayer catalog numbers, for the Imaging Systems listed below, is located on the cable near the Mark 7 Arterion Power Unit.

10.3.5.1 Injection System Initiates Injection

Table 10 - 1: Injection System Initiates Injection shows the results of pressing the Mark 7 Arterion Injection System handswitch or footswitch to initiate the protocol.

Table 10 - 1: Injection System Initiates Injection

OEM	Bayer Catalog Number	Action
GE	XMC 915R	No Injection/No X-ray
	XMC 917A	No Injection/No X-ray
GE/OEC	XMC 990R	Injection Only
Philips	XMC 925A	No Injection/No X-ray
	XMC 927A 1 knob operation	Injection Only
	XMC 927A 2 knob operation	No injection/No X-ray
	XMC 928A 1 knob operation	Injection Only
	XMC 928A 2 knob operation	No injection/No X-ray
	XMC 945 40	No Injection/No X-ray
	XMC 947R 1 knob operation	Injection Only
	XMC 947R 2 knob operation	No Injection/No X-ray
Siemens	XMC 970A	No Injection/No X-ray
	XMC 977A	No Injection/No X-ray
Toshiba	XMC 906i	Injection Only
Shimadzu	XMC 906i	Injection Only
Hitachi	XMC 906i	Injection Only
Ziehm	XMC 951A	Injection Only

10.3.5.2 Imaging System Initiates Protocol

Table 10 - 2: Imaging System Initiates Injection shows the results of pressing the Imaging System start switch to initiate the protocol.

Table 10 - 2: Imaging System Initiates Injection

OEM	Bayer Catalog Number	Action
GE	XMC 915R	Injection and X-ray
	XMC 917A	Injection and X-ray

Table 10 - 2: Imaging System Initiates Injection

OEM	Bayer Catalog Number	Action
GE/OEC	XMC 990R	Injection and X-ray
Philips	XMC 925A	No Injection/No X-ray
	XMC 927A 1 knob operation	Injection and X-ray
	XMC 927A 2 knob operation	No Injection/No X-ray
	XMC 928A 1 knob operation	Injection and X-ray
	XMC 928A 2 knob operation	No Injection/No X-ray
	XMC 945 40	No Injection/No X-ray
	XMC 947R 1 knob operation	Injection and X-ray
	XMC 947R 2 knob operation	No Injection/No X-ray
Siemens	XMC 970A	Injection and X-ray
	XMC 977A	Injection and X-ray
Toshiba	XMC 906i	Injection and X-ray
Shimadzu	XMC 906i	Injection and X-ray
Hitachi	XMC 906i	Injection and X-ray
Ziehm	XMC 951A	Injection and X-ray

10.3.5.3 Injection System and Imaging System Initiate Protocol - (Philips Imaging Systems Only)

Table 10 - 3: Injection System and Imaging System Initiate Protocol shows the results of pressing the Mark 7 Arterion Injection System handswitch or footswitch and the Philips Imaging System start switch simultaneously to initiate the protocol.

NOTE: For the Imaging Systems listed in this chapter, only Philips requires an operator to press the injector handswitch or footswitch and Imaging System switch simultaneously to initiate a protocol.

Table 10 - 3: Injection System and Imaging System Initiate Protocol

OEM	Bayer Catalog Number	Action
Philips	XMC 925A	Injection and X-ray
	XMC 927A 1 knob operation	Independent Actions - See Table 10 - 1 and Table 10 - 2
	XMC 927A 2 knob operation	Injection and X-ray

Table 10 - 3: Injection System and Imaging System Initiate Protocol

OEM	Bayer Catalog Number	Action
	XMC 928A 1 knob operation	Independent Actions - See Table 10 - 1 and Table 10 - 2
	XMC 928A 2 knob operation	Injection and X-ray
	XMC 945 40	No Action
	XMC947R 1 knob operation	Independent Actions - See Table 10 - 1 and Table 10 - 2
	XMC 947R 2 knob operation	Injection and X-ray

10.4 Completing an Injection

The injection system stops an injection when the programmed volume is delivered, or an operator terminates the injection. In the **Sentinel** window, an ***Injection Complete*** message displays for a completed injection, and a ***Premature Termination*** message displays for an operator terminated injection. The system emits an audible beep when the injection is complete.

NOTE: If finished with a Case, proceed to "Chapter 11 - Tear Down".

NOTE: To continue with a case, proceed to "10.5-Refilling Syringe During a Procedure" to refill a syringe, or return to "10.2-Arming the Injector" to rearm.

NOTE: If **End Case** pressed inadvertently, press **No** on the popup that appears to return to the current Case.

NOTE: To continue with a case after inadvertently pressing **End Case** and then pressing **Yes** on the popup, disconnect the patient, rotate the Head in the Purge position (upward), and purge the system of all air. Rearm the system.

10.5 Refilling Syringe During a Procedure

⚠WARNING

Air Embolism Hazard - Serious patient injury or death may result.

- Ensure that one operator is designated as being responsible for filling and refilling the syringe. Do not change operators during the procedure. If an operator change must occur, ensure that the new operator verifies that the fluid path is purged of air.
- Ensure that patient is not connected while purging air from syringe, or engaging or advancing plunger.
- Orient the Injector Head to the upright (Purge) position during filling of syringe and purging of air.
- Purge all air out of both the high pressure connector tubing and syringe after refilling syringe.
- Tap syringe after filling to facilitate air removal.
- Verify that the MEDRAD® FluiDots indicators are rounded to ensure that fluid is present in the syringe.

Cross Contamination Hazard - Serious patient and/or worker injury or death may result.

- Use caution when removing air from the syringe. Component damage may result from the use of tools during air removal.

⚠CAUTION

Environmental Contamination Hazard - Minor or moderate patient and/ or worker injury may result.

- Follow sterile technique principles, specifically, maintain sterility of the syringe tip, high pressure connector tubing, and catheter.

Refill only using the high pressure connector tubing from an appropriately labeled fluid source within the sterile field as described below.

1. Disconnect the high pressure connector tubing from the catheter.
2. Secure the distal connector of the high pressure connector tubing while using the handle and the back of the Injector Head (but not the Manual Knob) to rotate the Injector Head in the Purge (upright) position.
3. Insert the distal connector of the high pressure connector tubing into the contrast medium.
4. On the Injector Head, press the **Enable** button, and then press the reverse arrows on the **Fill Strip** until the system fills the syringe with the desired contrast volume.
   - Alternatively, on the Injector Head, press the **Enable** button and then press the **Auto-Fill** button. The Mark 7 Arterion fills the syringe with the preconfigured contrast volume at the preconfigured speed. The volume and speed are configured from the Display Control Unit ***Options*** tab.

   NOTE: Refer to "6.6.3.1-Auto-Fill Button with 15 mL Purge Configuration Options" for **Auto-Fill** use with 15 mL Purge Configuration Options.
5. If air bubbles remain within the syringe, including the syringe plunger, use your free hand to gently tap the base of the Pressure Jacket to facilitate migration of the bubbles to the syringe tip to ensure that all air bubbles are expelled.
6. Carefully observe the MEDRAD® FluiDots indicators to ensure that fluid is present in the syringe. Verify that the MEDRAD® FluiDots indicators are round in the filled portion of the syringe. The rounded shape of the MEDRAD® FluiDots indicators varies according to the type of contrast media, but an oblong shape indicates the presence of air. Rounded MEDRAD® FluiDots indicators do not indicate the total absence of air bubbles in the syringe tip.
7. Turn the Manual Knob clockwise to purge all air out of the syringe.

8. Visually confirm that all air bubbles have been removed from the syringe. Tap the pressure jacket after filling to facilitate air removal.
9. Secure the distal connector of the high pressure connector tubing.
10. Turn the Manual Knob clockwise to push contrast out until all of the air bubbles have been removed from the high pressure connector tubing. Gentle tapping at any connection point may be needed to facilitate air removal.
11. Use the handle and the back of the Injector Head (but not the Manual Knob or tubing) to rotate the Injector Head to the Inject (downward) position.
12. Secure the catheter hub in one hand and the distal rotating luer of the high pressure connector tubing in the other hand.
13. Advance the piston using the Manual Knob prior to connecting the high pressure connector tubing to a catheter or other non-Bayer disposables including administration sets and additions to administration sets, such as but not limited to bleed back control devices and pressure transducers.
14. Securely tighten the high pressure connector tubing connection to the catheter or other non-Bayer disposables including administration sets and additions to administration sets, such as but not limited to bleed back control devices and pressure transducers.
15. Aspirate via the manual knob when connecting to the high pressure connector tubing and a catheter or other non-Bayer disposables including administration sets and additions to administration sets, such as but not limited to bleed back control devices and pressure transducers to ensure all air has been removed from the fluid path.
16. Stop aspirating with manual knob once blood is visualized in high pressure connector tubing.
17. Verify that there is no air in the high pressure connector tubing.
    a. If there is air in the tubing, disconnect from patient, remove air, and try fluid to fluid connection again.
18. Once it has been established that all air has been removed, advance the Manual Knob forward to clear blood from high pressure connector tubing.

10.5.1 Refilling Syringe with 15 mL Purge Feature Enabled

For a full explanation of the system's purge options and configurations, refer to "9.7-Enabling 15 mL Purge Feature and Choosing Configuration Options".

	15 mL Purge ON		**15 mL Purge OFF**	
	≥15 mL Plunger Retraction	**<15 mL Plunger Retraction**	**≥15 mL Plunger Retraction**	**<15 mL Plunger Retraction**
Arming Requirements	**MUST** purge 3.5 mL or more with Injector in upright position	**NOT REQUIRED** to purge	**MUST** purge 3.5 mL or more **ONLY** when retraction occurs in Injector's upright position	**NOT REQUIRED** to purge
	Auto-Fill remains available for use		**Auto-Fill** only available in Injector's upright position	
	NOTE: Operator can still choose to purge prior to arming, if desired, with plunger retraction of < 15 mL but system will not require it		**NOTE:** Operator can still choose to purge, if desired, with plunger retraction of < 15 mL and/or upon plunger retraction in Injector's downward position	

NOTE: With 15 mL Purge turned **ON** or **OFF**, the system will require a purge in the upright position during system power-up, syringe installation, and new case.

11 Tear Down

⚠WARNING

Biological Contamination Hazard - Serious patient and/or worker injury or death may result.

- Properly discard disposables after use or if contamination may have occurred during setup or use.

This chapter discusses how to tear down and immediate cleaning of the injection system.

11.1 Remove Disposables

⚠WARNING

Bloodborne Contamination Hazard - Serious patient and/or worker injury or death may result.

- Press the **End Case** button on the Display Control Unit. Select **Yes** to acknowledge that you want to end the case, and that the patient has been disconnected from the system.
  - Alternatively, turn the Manual Knob counter-clockwise to retract the syringe plunger at least 2 mL.
- Properly discard disposables after use, in accordance with hospital hazard waste disposal procedures.

1. Disconnect the disposable tubing set from the vascular entry device, such as a catheter or sheath. The disposable tubing set does not need to be disconnected from the syringe.
2. Press the **End Case** button on the Display Control Unit. Select **Yes** to acknowledge that you want to end the case, and that the patient has been disconnected from the system.
   - Alternatively, turn the Manual Knob counter-clockwise to retract the syringe plunger at least 2 mL.
3. Open the drop front.
4. Rotate the syringe 1/4 turn clockwise and gently pull the syringe out of the Pressure Jacket. Discard the syringe with disposable tubing set into a bio-hazard container.

   NOTE: Once the syringe is removed from the injector and the Injector Head is rotated into the Purge position, the injector sounds an audible beep three times, and the piston automatically retracts to the home position. Auto Retract must be enabled for this feature to function.
5. If an operator used the Manual Knob to retract the syringe plunger, press **End Case** button on the Display Control Unit to reset the Actuals window and History.

11.2 Clean up

⚠WARNING

Cross Contamination Hazard - Serious patient and/or worker injury or death may result.

- Do not clean disposables.
- Do not contact disposables with cleaning agent during cleaning.
- Do not conduct cleaning process during injection procedure.

1. Wipe off contrast spills with warm water before they dry.
2. For all body fluid spills, follow institutional decontamination procedures.
3. Clean the Syringe Heat Maintainer. Remove the Syringe Heat Maintainer before cleaning. To clean the Syringe Heat Maintainer, refer to "Chapter 14 - Cleaning and Maintenance".
4. Clean the Pressure Jacket. Remove the Pressure Jacket from the syringe interface before cleaning. To clean Pressure Jacket, refer to "Chapter 14 - Cleaning and Maintenance".
5. If cleaning the piston is required fully advance the piston, then turn off the power.
6. Wipe components with:

- a germicidal wipe, or
- a bleach wipe, for isolation patients

NOTE: If contrast media has leaked inside any system component, turn off the power immediately. The affected subassembly should be disassembled and cleaned by Services personnel or returned to Bayer.

NOTE: In the event of fluid ingress or spillage on the injection system ensure all equipment and accessory connections are removed, dried, and inspected. Follow hospital policies and procedures or contact Bayer for performing appropriate electrical safety and operational checks prior to use.

11.3 Storing the Injector

Move the injector to a safe place, away from extreme or changing temperatures (hot or cold), dust, and spills.

12 System Messages

The Mark 7 Arterion Injection System displays Sentinel Messages and Popups to alert the operator that action is required.

This chapter describes:

- "Error Messages"
- "Sentinel Messages"
- "Popup Messages"

12.1 Error Messages

⚠WARNING

Electric Shock Hazard - Serious patient and/ or worker injury or death may result.

- Perform calibration when specific components listed in “Disassembly/Assembly & Replacement Parts” are replaced in the system.

⚠CAUTION

Mechanical Hazard - Minor or moderate patient and/or worker injury may result.

- Remove power and disconnect patient when system malfunction occurs.

Error messages are system malfunction messages which require power to be removed from the system. Error messages are accompanied by three beeps. Some error messages provide suggestions to prevent the condition from recurring. If the condition cannot be corrected, record the code and number from the lower left corner of the dialog box, then call Bayer for assistance.

NOTE: Follow the error instructions on the display and/or contact Bayer for further support.

Error messages are divided into categories of function level. Each category is also divided into specific errors. Below is a list of the categories and suggested repair sequences. These are to be tried in order, not to be performed all at once. For further assistance, contact Bayer or an authorized dealer.

NOTE: Before replacing any parts, cycle power to the system. This initiates a system self-test. If this does not correct the problem, replacement of serviceable components as needed may be required.

12.2 Sentinel Messages

Sentinel messages display in the Sentinel window located in the lower right of the touch screen. A Sentinel message informs an operator of items that need attention. If multiple items need to be corrected, the Sentinel window shows a list of the items that need to be corrected. As each item is corrected, the system removes the corresponding message from the Sentinel window.

Table 12 - 1: Sentinel Messages

Sentinel Message	Description/Resolution
Attach hand controller	Attach hand controller
Attach start switch or enable ISI	Attach a start switch or enable ISI.
Install Syringe	Install a syringe.
Close Drop Front	Completely close the drop front.
Advance Plunger	Fully advance the plunger in the syringe.

Table 12 - 1: Sentinel Messages

Sentinel Message	Description/Resolution
Rotate head up and purge	Use the handle and the back of the Injector Head (but not the Manual Knob or tubing) to rotate the Head in the Purge position (upward), and purge the system of all air. A minimum purge of 3.5 mL is required for the system to recognize it as a purge.
Rotate head down to arm	Use the handle and the back of the Injector Head (but not the Manual Knob or tubing) to rotate the Injector Head in Inject position (downward).
Flow Rate Reduced	The system reduced the flow rate during the injection.
Injection Complete	The injection has completed.
Disconnect Patient	An operator has selected **End Case** and **Yes** on the confirmation popup to end the case. Disconnect the patient.
Case Ended	Displays after an operator has selected **End Case** and **Yes** on the confirmation popup.
Rotate Syringe and Remove	Displays after an operator has selected **End Case** and **Yes** on the confirmation popup and a Syringe is present.
Procedure Halt - Display touch	The injection stopped, an operator touched the display touch screen.
Procedure Halt - Head Touch	The injection stopped, an operator pressed a button on the Injector Head.
Procedure Halt - ISI	The injection stopped, the imaging system interface terminated the injection.
Procedure Halt - Low Volume	The injection stopped, an insufficient volume condition occurs after an injection during a Multi Arm injection.
Procedure Halt - Start Switch	The injection stopped, an operator released the start switch during a mL/s injections or pressed the start switch a second time during a mL/m injection.
Calibration Needed	Have the system calibrated by Bayer or qualified Services personnel.

12.3 Popup Messages

Popups display on the touch screen and require the operator to make a selection on the screen to close the Popup.

Table 12 - 2: Popup Messages

Popup Message	Description/Resolution
WARNING - Do Not Inject Air. Have you expelled all air from syringe/disposable?	The Check for Air popup displays when initially arming the injector. This message displays again after any powered reverse piston motion or the drop front disengages. Confirm the disposable system is free of air, and select **Yes**.
Ensure the patient is disconnected. Are you sure you want to end the case?	Displays after an operator selects End Case. Select **Yes** to acknowledge that you want to end the case, and that the patient has been disconnected from the system. Select **No** to resume the case.
Purge Terminated. Check fluid path for occlusion.	The high pressure connector tubing or catheter may be kinked limiting the flow of contrast.
Insufficient volume. Continue with remaining volume? (***Single Protocol***)	The programmed volume exceed the remaining volume in the syringe. Select **Yes** to allow the system to adjust the protocol to use the volume remaining in the syringe. Select **No** to abort the arming process. Refill the syringe with the appropriate volume and rearm the system.
Lock released - User inactivity timeout.	The display control unit is no longer locked out. The timeout period has elapsed.
Insufficient volume for phased protocol. Revise protocol.	The programmed volume exceed the remaining volume in the syringe. Fill the syringe with the sufficient volume or revise the protocol. Rearm the system.
Unplug or replace Syringe Heat Maintainer.	The syringe heat maintainer is non-functional. Select **OK** to proceed with arming process. Injector will keep syringe heat maintainer disabled until it can determine that the fault is corrected or the heat maintainer is removed.
System Disarmed - Fluid flow stopped. Check for occlusion, reduce rate or increase pressure limit.	The system was not able to achieve the programmed flow rate. The high pressure connector tubing or catheter may be kinked limiting the flow of contrast. The programmed pressure limit is insufficient. Verify that the pressure limit matches the pressure rating of the disposables being used.

Table 12 - 2: Popup Messages

Popup Message	Description/Resolution
System Disarmed - Pressure limit exceed. Check for occlusion, reduce rate or increase pressure limit.	The system was not able to achieve the programmed flow rate. The high pressure connector tubing or catheter may be kinked limiting the flow of contrast. The programmed pressure limit is insufficient. Verify the pressure limit matches the pressure rating of the disposables being used.
System Disarmed - Drop front opened.	Drop front has dislodged from the syringe. Disconnect Patient. Close the drop front, Purge the system, and rearm the injector.
System Disarmed - Head position changed.	The Injector Head was rotated out of the inject position. Use the handle and the back of the Injector Head (but not the Manual Knob or tubing) to rotate injector head to the Inject (downward) position.
System Disarmed - Piston moved more than 2mL.	A reverse piston motion of more than 2mL occurred via the manual knob. Rearm the system.
System Disarmed - No start switch or ISI is available.	All start switches have been disconnected from the system, and/or ISI has been disabled. Attach start switch and/or confirm ISI is available, and rearm the system.
System Disarmed – Start switch disconnected.	A start switch was disconnected during an injection. Attach a start switch, and rearm the system.
System Disarmed - Handswitch disconnected.	A handswitch was disconnected when the system was armed. Reconnect the handswitch, and rearm the system.
System Disarmed - Handswitch connected. Rearm.	A handswitch was connected to the system when the system was armed. Rearm the system.
System Disarmed - Footswitch disconnected.	A footswitch was disconnected when the system was armed. Reconnect the footswitch, and rearm the system.
System Disarmed - Footswitch connected. Rearm.	A footswitch was connected to the system when the system was armed. Rearm the system.
System Disarmed - Injector temperature exceeded.	The temperature of the Injector Head exceeded the limits. Check the system.
System Disarmed - User Inactivity Timeout.	The system remained idle for 30 minutes. Rearm the system.

Table 12 - 2: Popup Messages

Popup Message	Description/Resolution
System Disarmed - ISI not ready	ISI is not communicating correctly with the system. Check ISI connections and communication.
System Disarmed ISI interface module failure. Disable ISI to proceed.	The ISI interface is not functioning properly. Disable ISI at the injector system to continue with the injection.
System Disarmed - ISI not synchronized	The ISI remote start is already on when the injector is armed, or the ISI handswitch disable is turned on after an injection is started using the injector handswitch or footswitch.
Local DCU communication lost.	The system lost communication with Display Control Unit. Check cable connections and communication.
Remote DCU communication lost.	The system lost communication with Display Control Unit. Check cable connections and communication.
Local DCU attempts to establish communication with injector.	The system lost communication with Display Control Unit. Check cable connections and communication.
Are you sure you want to delete?	Displays when an operator deletes a protocol. Select **Yes** to confirm the deletion. Select **No** to return to the Protocol Edit screen.
Settings changed. Confirm?	Displays when an operator makes changes to an option on the ***Options*** tab and selects another tab without saving those changes. Select **Yes** to save the change and go to the selected tab. Select **No** cancel the change and go to the selected tab.
Select calibration Interval.	An interval has not been set for the calibration. Enter a interval.
Protocol storage is full. Please delete a protocol before adding a new one.	Displays when Protocol storage is full and an operator attempts to save a new one. Delete a protocol.
Please choose another name for this protocol.	Displays when an operator attempts to save a protocol using the same name as an existing protocol.
Please enter a valid day.	Displays when an operator enters an invalid date. Enter a valid date.
Please enter a valid month.	Displays when an operator enters an invalid month. Enter a valid month.

Table 12 - 2: Popup Messages

Popup Message	Description/Resolution
Change flow mode?	Select **Yes** to change the flow mode to mL/m.
ISI interface module failure. Disable ISI to proceed.	The ISI interface is not functioning properly. Disable ISI at the injector system to continue with the injection.
ISI not synchronized	The ISI remote start is already on when the injector is armed, or the ISI handswitch disable is turned on after an injection is started using the injector handswitch or footswitch.
ISI not ready	ISI is not communicating correctly with the system. Check ISI connections and communication.

13 VirtualCare™ Option

VirtualCare™ is a Service expansion option that can be installed for the Mark 7 Arterion Injection System. The VirtualCare™ provides remote service functionality that allows Bayer to remotely update injector firmware, diagnose injector errors, and retrieve logs.

Contact your local representative from Bayer for additional information.

14 Cleaning and Maintenance

⚠WARNING

Cross Contamination Hazard - Serious patient and/or worker injury or death may result.

- Do not contact disposables with cleaning agent during cleaning.
- Do not conduct cleaning process during injection procedure.
- The system is not to be serviced or maintained while in use with a patient.

NOTICE

Electro-Mechanical Hazard - Equipment Damage may result.

- Disconnect power before cleaning.
- Use a wipe or dampened cloth for cleaning.
- Do not soak or immerse components.
- Do not use strong cleaning agents.
- Perform routine cleaning and maintenance.
- Remove power when connecting or disconnecting cables.
- Do not clean the syringe.

This chapter identifies the proper methods for cleaning the injection system, the recommended maintenance schedule, and an operational checkout of the injection system.

The injection system must be properly maintained to ensure it is in peak operating condition. Your individual maintenance schedule depends upon how your injection system is used, the type of procedures performed, and frequency of use.

Failures which occur due to lack of proper maintenance will not be covered under warranty.

NOTE: Bayer will make available for purchase upon request:

- Service and schematic manuals that will assist qualified technicians to repair components classified as repairable.
- On-site consulting services.

14.1 Daily

⚠CAUTION

Mechanical Hazard - Minor or moderate patient and/or worker injury may result.

- Do not use an autoclave to sterilize the Pressure Jacket.
- Refer to Pressure Jacket cleaning instructions.

The following procedures are recommended for daily cleaning and inspection of all components on the injection system. If any defects are detected, either repair the system, or call contact Bayer or the local authorized dealer for service. Do not use the system until the problem is corrected.

14.1.1 Cleaning the Injector Head, Syringe Heat Maintainer, Drop Front Cover, Pressure Jacket, Piston, Syringe Interface, and Table Bracket

Clean components, except Heat Maintainer and Pressure Jacket, with:

- a germicidal wipe, or
- a bleach wipe, for isolation patients

1. Do not remove any covers except the Drop Front Cover. Do not disassemble the injector.
2. Remove the Syringe Heat Maintainer.

3. Clean the Syringe Heat Maintainer with a dampened cloth using soap and water.
4. Remove the Drop Front Cover.

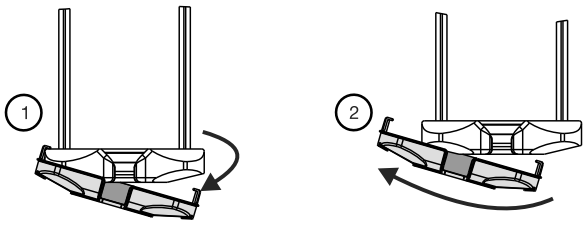

5. Clean the Drop Front Cover with a soft cloth or a paper towel dampened with a cleaning solution to remove contrast media and other contamination.
6. Remove the Pressure Jacket.

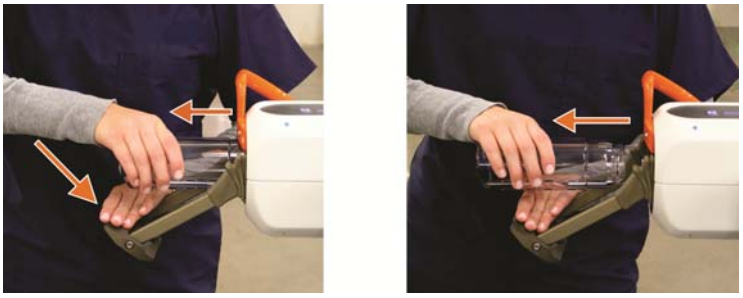

7. Clean the Pressure Jacket with a soft cloth or a paper towel dampened with a cleaning solution to remove contrast media and other contamination.

   Some cleaning agents react with the plastic material and may cause structural degradation. Bayer recommends that the Pressure Jacket be washed in a solution of warm tap water (35° – 45° C) and mild non-abrasive detergent (neutral grade low pH, enzymatic cleaner), and then rinsed thoroughly and dried with a soft towel.

   A solution of dish washing detergent and water is compatible with the Pressure Jacket. If a germicidal cleaning agent is desired, contact the germicide manufacturer to check the recommended dilution and compatibility with polycarbonates. If the solution is acceptable, follow the manufacturer's directions exactly. Do not clean the Pressure Jacket with an automatic dishwasher. The Pressure Jacket is not dishwasher safe. Do not leave the Pressure Jacket in germicide for extended periods of time. Do not expose the Pressure Jacket to fluorocarbons (such as Freon), or other solvents (acetone, benzol, carbon tetrachloride, MEK, MIBK, toluol, trichlor, and triclene). Gasses used to pressurize aerosol cans can be damaging to the Pressure Jacket. Therefore, do not use aerosols in or around the Pressure Jacket.

8. Fully advance the piston
9. Turn off the system at the Power Unit.
10. Clean the piston.
11. Clean the inner area of the syringe interface.
12. Clean the drop front. The drop front cone should pivot freely back and forth. If it does not, it may be contaminated with contrast.
13. Clean the Injector Head case.
14. Re-install the clean Pressure Jacket.
15. Re-install the clean Drop Front Cover.
16. Re-install the clean Syringe Heat Maintainer.
17. Clean any spilled contrast media from the Table Bracket and table rail to assure free movement of the bracket along the rail.

NOTE: In the event of fluid ingress or spillage on the injection system ensure all equipment and accessory connections are removed, dried, and inspected. Follow hospital policies and procedures or contact Bayer for performing appropriate electrical safety and operational checks prior to use.

14.1.2 Inspecting the Injector Head

- Inspect the housing for any damage or cracks that could allow fluid to leak inside, or weaken the structural integrity of the unit.
- Inspect all cables connected to the unit.
  - Look for cuts, cracks, worn spots or other obvious damage to the cables.
  - Ensure that all connectors are properly seated.
- Ensure that all mounting bolts and screws are secure.
- Inspect for contrast media build-up in the syringe interface area, including the Syringe Heat Maintainer and the Pressure Jacket. Follow the cleaning guidelines outlined in this chapter.
- Inspect the pivot points to ensure they move freely.
- Inspect the Injector Head Controls for damage or excessive wear.

14.1.3 Inspecting the Pressure Jacket

Prior to each procedure, inspect the Pressure Jacket for signs of deterioration or fatigue by looking through it with light shining through the Pressure Jacket. Bayer recommends replacing the Pressure Jacket if defects are found during daily inspection.

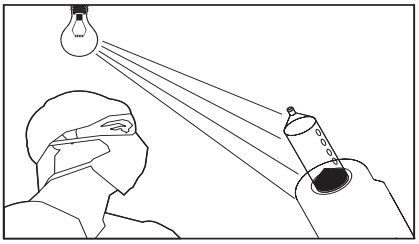

Rotate the Pressure Jacket while looking through it to view all areas. This includes the front edges and the entire cylindrical surface and the grooves that interface with the injector head.

A Pressure Jacket should be rejected for cracks, crazing, scratches (if a fingernail can catch on the scratch), and opacity. These conditions indicate that the Pressure Jacket has been weakened and may fracture during a high pressure injection. The Pressure Jacket should NOT BE USED if any of these conditions exist.

Cracks are usually the result of a sharp impact (such as from dropping). A crack may appear simply as a line, usually originating at the radius or edge and may also appear in conjunction with crazing.

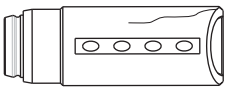

Figure 14 - 1: Cracks

Stress Cracks may appear after the Pressure Jacket has been subjected to a number of pressure cycles. These tiny cracks appear around the front area of the Pressure Jacket, and usually form a pattern around the jacket's circumference. Stress cracks are easiest to see while rotating the Pressure Jacket in front of a light source.

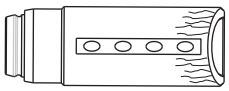

Figure 14 - 2: Stress Cracks

Crazing can occur when non-compatible cleaning solutions or solvents are used on the Pressure Jacket. Crazing can also occur when the Pressure Jacket has reached the end of its expected life. Crazing appears as small lines that interfere with the transparency of the Pressure Jacket. Crazing usually appears localized to a point of impact or fatigue.

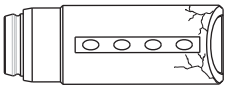

Figure 14 - 3: Crazing

Scratches result from objects striking or scraping the inside or outside surface of the Pressure Jacket. Scratches may occur when the Pressure Jacket is improperly handled. Check depth of scratches by pulling your finger across the scratch, perpendicular to the surface. If your fingernail catches on a scratch, the Pressure Jacket should NOT BE USED.

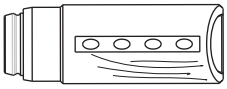

Figure 14 - 4: Scratches

Normally the Pressure Jacket is transparent, enabling you to clearly see through the barrel.

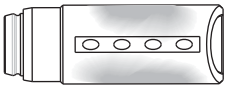

Figure 14 - 5: Opacity

14.1.4 Inspecting the Heat Maintainer

- Inspect the Heat Maintainer for cracks. Bayer recommends replacing the Heat Maintainer if cracks are found during inspection.

14.1.5 Inspecting the Display Control Unit

- Inspect the cable connected to the Display Control Unit.
  - Look for cuts, cracks, or worn spots, or other obvious damage.
  - Ensure that the connector is properly seated and fastened securely.
- Inspect the housing for any damage or cracks that could allow fluid to leak inside, or weaken the structural integrity of the unit.

14.1.6 Inspecting the Table Mount Bracket

- Inspect the Clamp knob to ensure that it is tightened.
- Inspect the Injector Head knob to ensure it is tight and the Injector Head fits securely in the Table Bracket.
- Inspect for broken or damaged parts.
- Check the vertical motion of the Table Bracket. If the gas spring is not functioning properly, do not use the bracket.

14.1.7 Inspecting the Pedestal

- Inspect the base, column, casters and handle for cracks and other defects that could weaken the structure
- Ensure all mounting bolts and screws are secure.
- Ensure that the casters roll smoothly with no binding or scraping.
- Ensure all locking mechanisms on the casters are functional.

14.1.8 Inspecting the Power Unit

- Inspect the cables connected to the Power Unit.
  - Look for cuts, cracks, or worn spots, or other obvious damage.
  - Ensure that the connectors are properly seated.
- Inspect the housing for any damage or cracks that could allow fluid to leak inside, or weaken the structural integrity of the unit.
- Ensure that the air vents are not clogged.

14.2 Monthly

Once a month, the entire system should be thoroughly inspected and cleaned, and an Operation Checkout should be performed using the procedures outlined in "14.2.3 - Performing an Operational Checkout".

14.2.1 Cleaning the Display Control Unit, Pedestal, Power Unit, and Table Bracket

NOTICE
Electro-Mechanical Hazard - Equipment Damage may result. • Remove power when connecting or disconnecting cables. • Do not spray cleaning solutions directly onto the DCU touch screen.

Clean components, except Pressure Jacket, with:

- a germicidal wipe, or
- a bleach wipe, for isolation patients

Turn off the system at the Power Unit. Clean the Display Control Unit, Pedestal, and Power Unit.

Remove the table bracket from the rail and clean off accumulated contrast media using soapy water and dry thoroughly.

14.2.2 Inspecting and Cleaning the Internal Air Filter

1. Turn off the system at the Power Unit.
2. Remove the two screws shown in the drawing below.

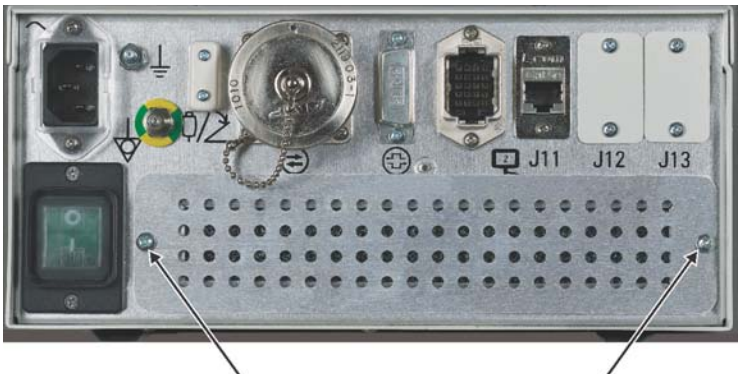

Figure 14 - 6: Power Unit Air Filter

3. Pull out the air filter.
4. Vacuum or rinse the air filter with water and thoroughly dry before re-installing.
5. Re-install the clean, dry air filter (Note the direction of arrow for air flow - air should flow into the unit).
6. Replace the two screws.

NOTE: Inspect the internal air filter monthly and clean at least once per year (this can be done more frequently as needed).

14.2.3 Performing an Operational Checkout

⚠WARNING

Equipment Malfunction Hazard - Serious patient and/or worker injury or death may result.

- Do not use the injection system if any problems are detected during the operational checkout.

A basic functional checkout of the injection system should be included as part of monthly maintenance. Verify proper operation of the injection system to help detect any problems that may not be noticed in day-to-day operation. The following procedure represents a suggested series of activities which encompasses typical operation of the system. Read the following procedure carefully before beginning the checkout. If problems are detected or any step fails this checkout, contact your Services Representative.

An empty Syringe is required to perform this checkout.

1. Plug in the injection system.
2. Press the **Power Switch** on the Power Unit, and press the **Power Switch** on the Display Control Unit. Both power switches should illuminate green.
   a. Ensure that the system passes self-test with no error messages. When self-test completes, a safety screen displays.
   b. Press **Continue** to clear the safety information.
   c. Ensure that the ***Home*** tab displays.
3. Press the brightness controls to ensure that the controls vary the display brightness without completely obscuring information at either extreme. Adjust to a suitable brightness.
4. Use the handle and the back of the Injector Head (but not the Manual Knob) to rotate the Injector Head to the Purge position (upright).
   a. Ensure that the Volume Remaining display on the Injector Head is active and is properly oriented.
   b. Ensure that the Flow Rate, Volume, and Pressure Limit are not active.
5. Use the handle and the back of the Injector Head (but not the Manual Knob) to the Inject position (downward).

   a. Ensure that the Volume Remaining display inverts.
   b. Ensure that the Flow Rate, Volume, and Pressure Limit display and are properly oriented.

6. Insert an empty syringe into the syringe interface.
   a. Completely close the drop front.
   b. Ensure that the Volume Remaining icon on the Injector Head illuminates.

7. Press the Forward and Reverse on the **Fill Strip**.
   a. Ensure the piston does not move.

8. Press the **Enable** button.
   a. Ensure the green indicator near the enable key illuminates.
   b. Ensure the green indicator goes out after approximately five seconds.

9. Press the **Enable** button, and press Forward on the Fill Strip within five seconds.
   a. Ensure that the piston extends.
   b. Vary the position of your finger on the Fill Strip to ensure the piston load speed varies.
   c. Ensure that the Volume Remaining display on the head decreases.

10. Press the **Enable** button, and press Reverse on the Fill Strip within five seconds.
   a. Ensure that the piston retracts.
   b. Vary the position of your finger on the Fill Strip to ensure the piston load speed varies.
   c. Ensure that the Volume Remaining display on the head increases.
   d. Retract the piston to its rear limit. The Volume Remaining should read “150mL”.

11. From the ***Home*** tab, enter a protocol with the following parameters:

   Volume - 20 mL
   Flow Rate - 10 mL/s
   Pressure Limit - 500 PSI

   a. Ensure the Injector Head displays these value.

12. Select **Arm Single** to Arm the injector.
   a. Ensure that the display indicates that the injector is in the Armed state.
   b. Ensure that the Armed light on the injector head is on solid.

13. Using the handswitch or footswitch, initiate an injection.
   a. Ensure that the Display Control Unit display indicates that the injector is in the “Injecting” state and the Armed light on the injector head flashes.
   b. Confirm that the injection completes in approximately 2 seconds.
   c. Ensure that the Armed light on the Injector Head goes out.
   d. When the injection is complete, release the switch.
   e. Ensure the Actuals window on the Display Control Unit indicates that 20 mL volume was delivered at a rate of 10 mL/s.

14. From the Display Control Unit touch screen, change the Volume to 50mL.
   a. Select **Arm Single** to arm the injector.
   b. Use the handswitch or footswitch to initiate an injection.
   c. Release it within 2 seconds.
   d. Ensure the injection stops and disarms.
   e. Ensure a “Premature Termination” message displays in the Sentinel window.

15. From the **Home** tab, select the Variable tab and enter a protocol with the following parameters: Volume - 10mL, Flow Rate - 1 mL/s, Pressure Limit - 300 PSI
   a. Arm the system. the armed light should be solid while armed and the system should initially beep.
   b. Initiate the Variable Flow Rate injection via the Hand Controller. Vary the flow during the injection. Confirm that the rate can be varied from 0 to 1 mL/s. Volume delivered should indicate 10 mL (if the injection is completed). No pressure limiting should occur.

c. The flow rate of the delivery should change in accordance with Hand Controller trigger position. The DCU should display instantaneous flow rate during injection.
d. The armed light should switch from solid to flashing illumination during injection. The injection should complete without error. If the system has sufficient fluid for another injection, the system should return tot he armed state. If the system has insufficient fluid, the unit will disarm at the end of the injection and display “Procedure Halt - Low Volume” in the sentinel window.

16. Retract the piston to its rear limit.
    a. Select either **Arm Single** or **Arm Multiple** to arm the injector.
    b. Open the drop front.
    c. Ensure that the system disarms.
    d. Close the drop front.
17. Select either **Arm Single** or **Arm Multiple** to arm the injector.
    a. Press the **Disarm** button on the Display Control Unit.
    b. Ensure the system disarms.
18. Select either **Arm Single** or **Arm Multiple** to arm the injector.
    a. Press any button on the Injector Head.
    b. Ensure the system disarms.
19. Select either **Arm Single** or **Arm Multiple** to arm the injector.
    a. Use the handle and the back of the Injector Head (but not the Manual Knob) to rotate the Injector Head to the Purge position (upright).
    b. Ensure the system disarms and cannot be re-armed unless the head is rotated back to the Injection position.
20. If a Syringe Heat Maintainer is connected to the Injector Head, ensure that it is warm to the touch.
    a. Ensure the over-temperature message is not displayed in Sentinel window.
21. If ISI is connected, enable ISI and check for errors.
22. Power down the system and remove the syringe and dispose of it properly.

14.3 Annually

Bayer offers Preventative Maintenance Programs. These annual programs greatly assist in maintaining accuracy and reliability, and can also extend the life of the system. Contact Bayer or your local authorized dealer for further information. Refer to the back of the title page of this manual for address, telephone and fax information.

14.3.1 Injection System Calibration

Bayer recommends a complete system calibration and performance checkout be performed annually. Contact Bayer or your local authorized dealer for complete details.

14.3.2 Checking Leakage

As part of an annual maintenance program performed by a qualified Services Representative or authorized dealer, both Electrical leakage and protective earth ground continuity checks should be performed.

NOTE: Local regulations or hospital protocol may require electrical leakage checks at more frequent intervals. If this applies, the local regulations for leakage must be followed.

15 Installation - System and Accessory

⚠CAUTION
Mechanical Hazard - Minor or moderate patient and/ or worker injury may result. • Do not create a trip hazard when routing cables. • Follow installation procedures including use of proper screws and plugging all unused holes.

This chapter describes:

- "Unpacking the Injection System"
- "Pedestal Mount Installation"
- "Power Unit Installation"
- "Injector Head Mounting Options"
- "Display Control Unit Mounting Options"
- "Accessory Installation"

NOTE: Contact Bayer for additional installation information.

NOTE: All relevant guidelines for institutional, local or national safety recommendations related to cable routing and installation should be followed.

NOTE: After installation, it is recommended that an operational checkout be performed. See "14.2.3-Performing an Operational Checkout" for more information.

15.1 Unpacking the Injection System

⚠CAUTION
Mechanical Hazard - Minor or moderate worker Injury May Result. • Use two persons to lift or move heavy or large packaging. • Visually inspect contents and package before use. • Do not use if package is damaged.

The system is shipped in multiple cartons, with the number of cartons depending on the type of installation. The major components of the injector system are shipped in two cartons.

Shipper cartons:

- Carton containing the injector head, display and base.
- Carton containing the accessory items/interconnect cables.

Additional Shipper Cartons:

- Carton containing the injector head mounting option, either a Pedestal or Overhead Counterpoised System (OCS).

NOTE: Before installing, remove and inspect the contents from each carton and verify that all components are present. Call Bayer immediately regarding damaged or missing components.

15.2 Pedestal Mount Installation

⚠WARNING

Air Embolism Hazard - Serious patient injury or death may result.

- Injector head shall be mounted on Articulating Arm.

⚠CAUTION

Mechanical Hazard - Minor or moderate patient and/ or worker injury may result.

- Move Articulating Arm to upper position prior to removing head.
- Do not mount DCU to Articulating Arm.

The Mark 7 Arterion pedestal mount configuration ships in two boxes as noted in "15.1 - Unpacking the Injection System". The installer needs to complete the pedestal assembly, attach the Injector Head and Display Control Unit, route cables, and make the connections to the Power Unit.

1. Remove the pedestal from the box.

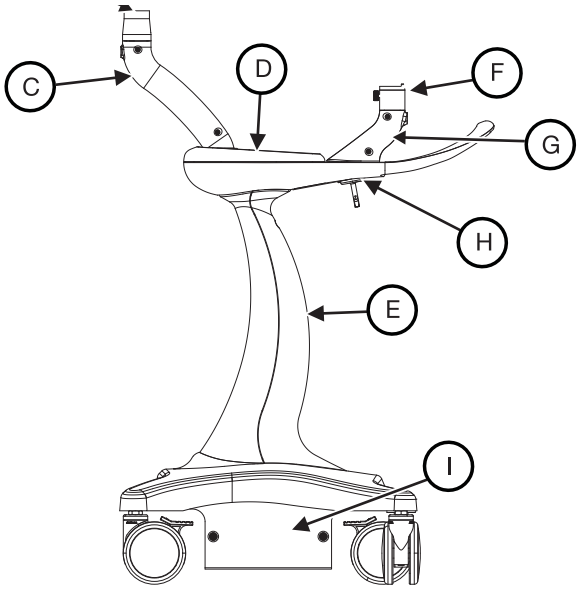

Figure 15 - 1: Pedestal

2. Insert the male end of the articulating arm into top of the upper mast (A).
   - Tighten the thumb screw.
3. Attach the Injector Head to the articulating arm.
   a. Loosen the Injector Head Knob (B) by turning counterclockwise until it spins freely.

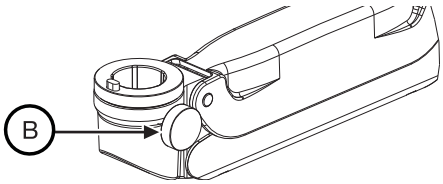

Figure 15 - 2: Loosen the Injector Head Knob

   b. Insert the Injector Head mounting pin into the top of the Articulating Arm.

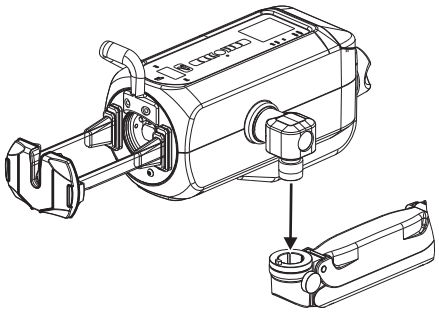

Figure 15 - 3: Attach Injector Head to Articulating Arm

c. Secure the Injector Head by turning the Injector Head Knob as far as possible clockwise.

d. Ensure that the Injector Head Knob is as tight as possible to facilitate a secure fit of the Injector Head in the Articulating Arm.

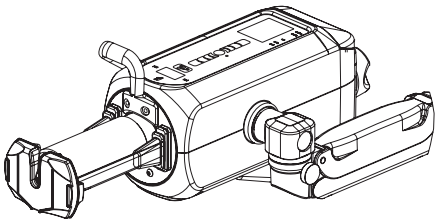

Figure 15 - 4: Injector Head Mounted on Articulating Arm

NOTE: Loosen the Injector Head Knob prior to repositioning the Injector Head.

NOTE: Removing the Injector Head is the reverse of installation.

4. Remove the upper mast cover (C) and retain the screws.

5. Loosen the contrast tray (D) by pushing from the bottom.

6. Remove the lower mast (E) cover and retain the screw.

7. In the lower mast, remove the cable guide and retain the screws.

8. Route the injector head cable through the opening of the contrast tray and then down through the hole in the top of the upper mast.

9. Attach the Fulcrum Mount to the Display Control Unit (see "15.5.1 - Fulcrum Mount Kit Installation" in this chapter).

10. Insert the mounting pin of the fulcrum mount into the Display Control Unit post (F).

- Tighten the thumb screw on the Display Control Unit mast.

11. Loosen the screws on the Display Control Unit mast cover (G) to remove the cover opposite the screw heads.

12. Remove the hook plate (H) from the underside of the handle assembly and retain the screws.

13. Feed the Display Control Unit cable through hole adjacent to the Display Control Unit mast.

14. Insert Power Unit into base (I) from the handle side of the pedestal.

- Line up the target on the side of the power unit with the opening in the side of the bracket.

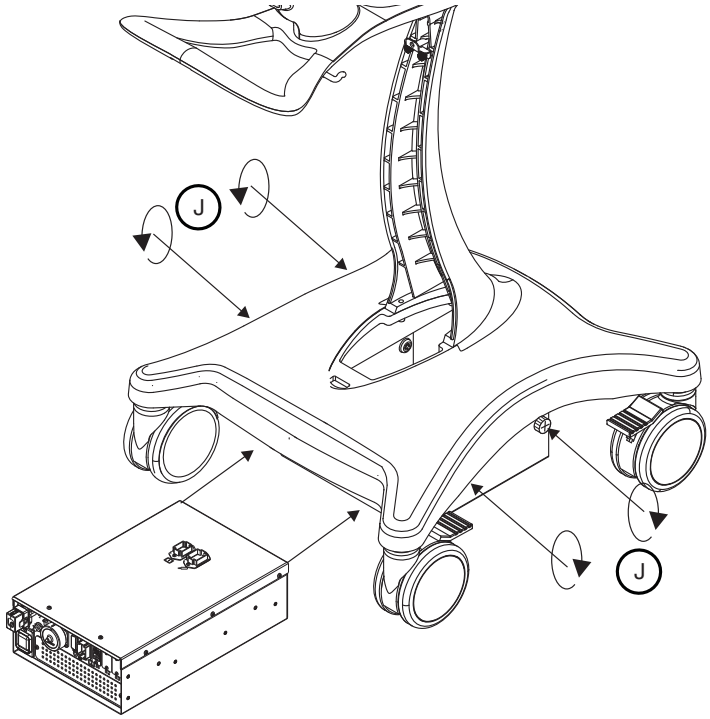

Figure 15 - 5: Insert Power Unit

- Secure the Power Unit with the four thumb screws (J) attached to the base.

15. Connect Display Control Unit cord to Display Control Unit connection on the top of the Power Unit.

16. Connect the Injector Head connection on the top of the Power Unit.

17. Align the Display Control Unit cable into the channel on the bottom of the handle assembly and attach the hook plate (H) to the bottom of the upper mast. Center the black tape on the cord with the opening of the cover. Leave enough slack in the cable to allow the Display Control Unit to turn freely.

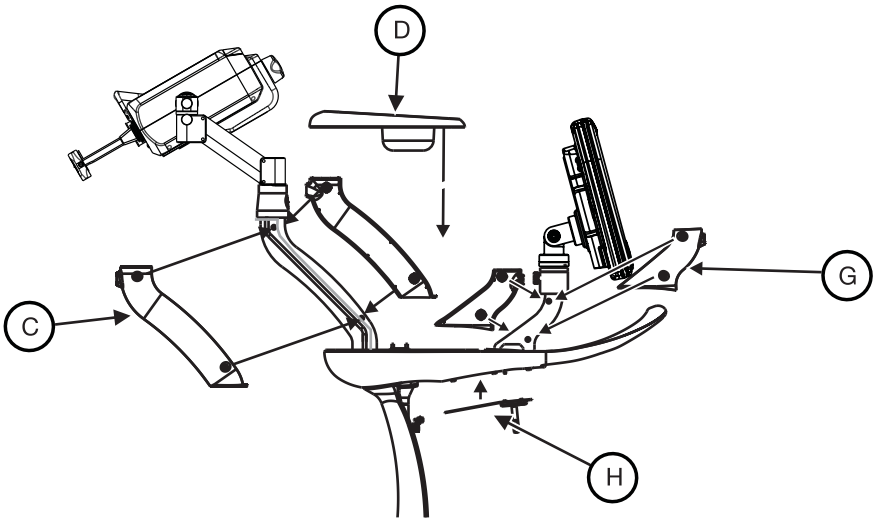

Figure 15 - 6: Assemble Pedestal

18. Attach the Display Control Unit mast cover (G), and reconnect the contrast tray (D).
19. Attach the Upper mast cover (C) while aligning the Injector Head cable into the molded guides in the mast cover piece. Leave enough slack to allow full movement of the Injector Head on the upper mast.
20. Loop the Display Control Unit and Injector Head cables and secure with the Cable loop as shown in the figure below.

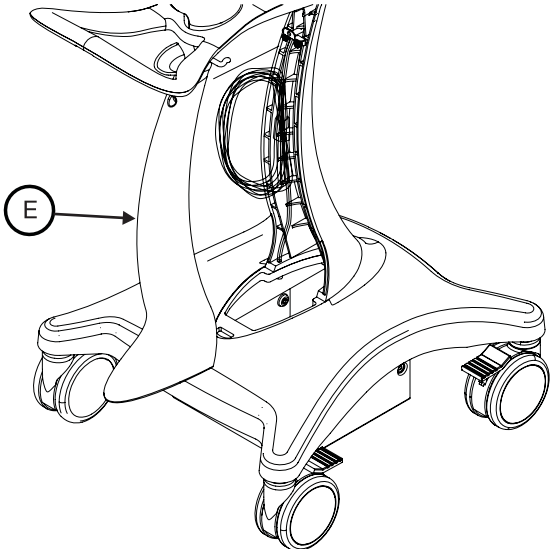

Figure 15 - 7: Pedestal Cable Routing

21. In the Lower mast, attach the cable guide with the Display Control Unit and Injector Head cables behind it and in the channel on the lower mast. Ensure the flange hole for the upper mast screw is facing up.
22. Attach the Lower Mast cover (E).
23. Connect the Power Unit power cord to the inlet plug on the Power Unit.

15.3 Power Unit Installation

⚠WARNING

Electric Shock Hazard - Serious patient and/ or worker injury or death may result.

- Use only power cord approved for use on Mark 7 Arterion.
- For U.S installations, equipment shall only be connected to Hospital Grade or Hospital Only outlets.

NOTICE

Electro-Mechanical Hazard - Equipment damage may result.

- Do not block Power Unit Vents.
- Installation clearance should be a minimum of 3 to 5 inches (8 to 13 cm).

For U.S installations, equipment shall only be connected to Hospital Grade or Hospital Only outlets. This section shows all of the Power Unit connection points, describes how to relocate the connections from the top plate to the back plate, and shows how to assemble the Power Unit floor mount bracket,.

15.3.1 Power Unit Connections

The Power Unit has connection ports on the top plate, front plate, and back plate. When the Power Unit ships from the factory, only the ports on the top plate and front plate have live connections. This section shows the location of each port and provides a brief description of each.

NOTE: The connectors on the top plate should only be used for the Pedestal mount configuration.

NOTE: See "15.3.3-Relocate Power Unit Connectors" for information on switching connection ports from the top plate to the back plate.

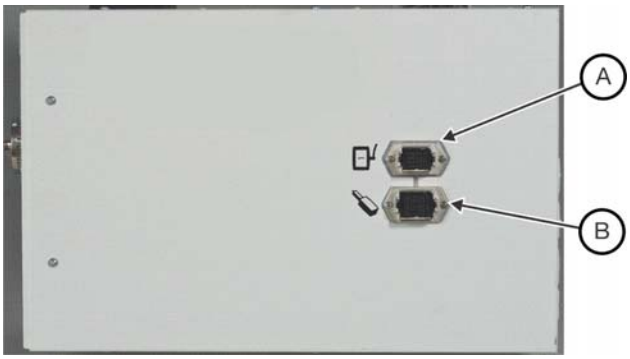

Figure 15 - 8: Top Plate

A	Display Control Unit Connection for a single or first Display Control Unit in a two Display Control Unit System
B	Injector Head Connection

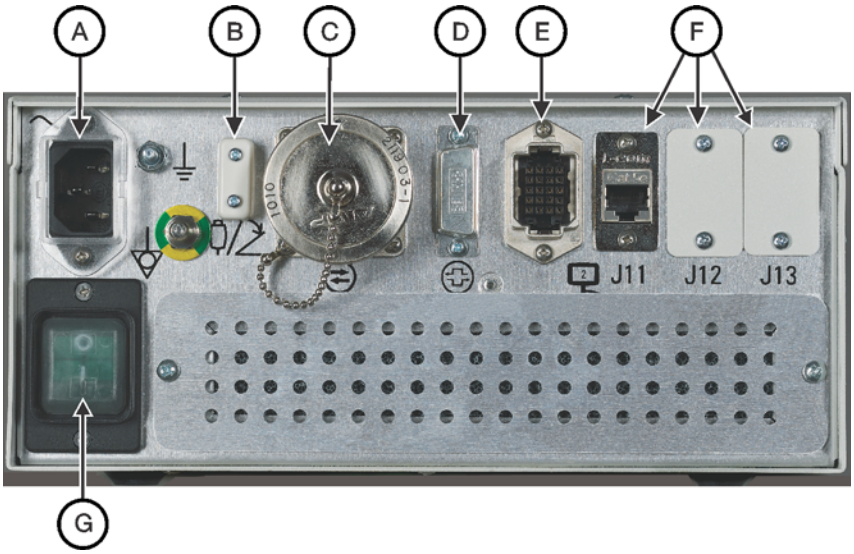

Figure 15 - 9: Front Plate

A	A/C Inlet Plug	B	Handswitch or Footswitch Connection
C	ISI connection	D	CAN Connection (Future Use)

E	Display Control Unit Connection for a second Display Control Unit in a two Display Control Unit system	F	Future Expansion Port
G	Power Switch		

The connections on the back plate do not have live connections when the Power Unit ships from the factory. To use these ports, see "15.3.3-Relocate Power Unit Connectors" for more information.

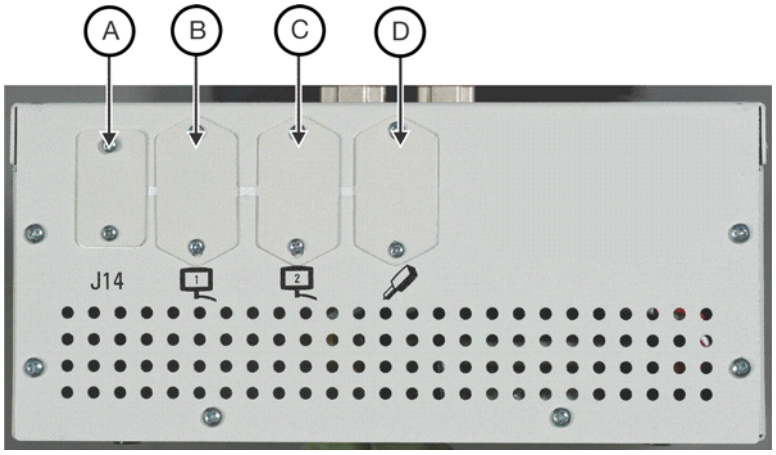

Figure 15 - 10: Back Plate

A	Future Expansion Port	B	Display Control Unit Connection for a single or first Display Control Unit in a two Display Control Unit System
C	Display Control Unit Connection for a second Display Control Unit	D	Injector Head Connection

15.3.2 Power Unit Floor Mount Bracket Assembly

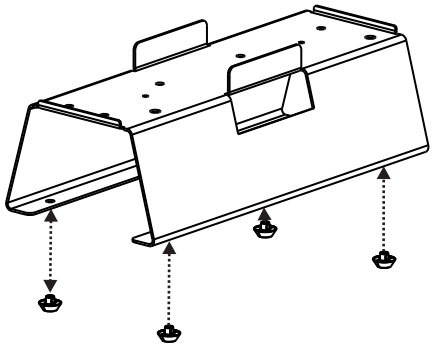

Figure 15 - 11: Install Rubber Feet

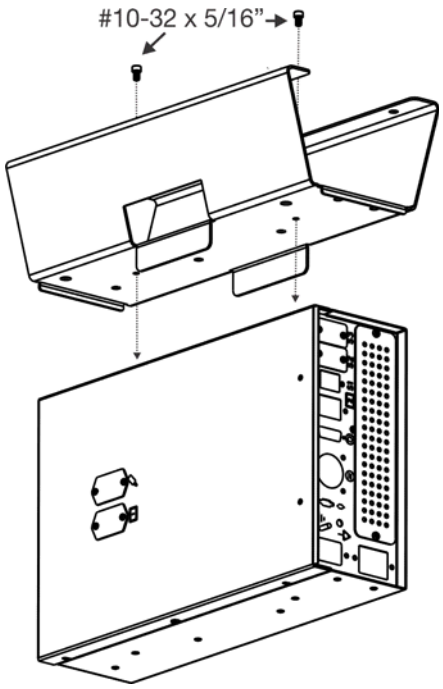

Figure 15 - 12: Attach Floor Mount

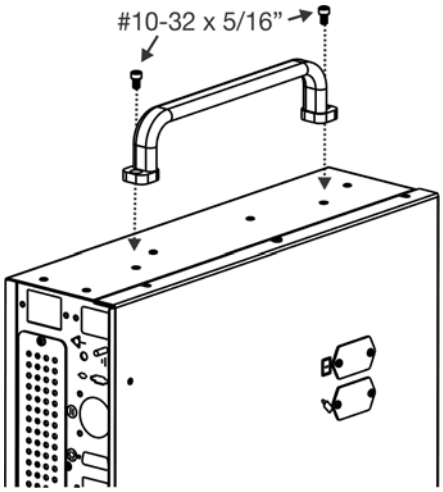

Figure 15 - 13: Attach Handle

15.3.3 Relocate Power Unit Connectors

NOTICE
Electro-Mechanical Hazard - Equipment damage may result. • Follow Electrostatic Discharge (ESD) protection practices. • Disconnect the power cord before removing or replacing PC boards.

The Display Control Unit and Injector Head connectors on the Mark 7 Arterion Power Unit can be moved to accommodate different configurations. The Display Control Unit and Injector Head connectors found on the top of the Power Unit can be moved to the back. The Display Control Unit 2 connection on the front of the Power Unit can be moved to the back.

Contact your local service representative for assistance.

15.4 Injector Head Mounting Options

- "Head Stand Installation (KMA 320RT)"
- "Adjustable Height Stand Installation (KMA 330)"
- "Overhead Counterpoised System Installation"
- “Adjustable Table Bracket Installation (KMA 350)

NOTE: This section assumes that the operator has installed the mounting devices.

NOTE: See "15.3.1-Power Unit Connections" for connection locations.

15.4.1 Head Stand Installation (KMA 320RT)

Refer to DN-231999 for installation instructions.

15.4.2 Adjustable Height Stand Installation (KMA 330)

Refer to 201011 (English) or 201061 (Japanese) for installation instructions.

15.4.3 Adjustable Table Bracket Installation (KMA 350)

Refer to 3040373 for installation instructions.

15.4.4 Overhead Counterpoised System Installation

For OCS installation instructions refer to the MAVIG Portegra2 Suspension System for MEDRAD® Injectors Installation Manual (MED01002E).

15.5 Display Control Unit Mounting Options

- "Fulcrum Mount Kit Installation"
- "Desk Stand Kit Installation"
- "Fixed Table Mount Installation"
- "Wall Mount Bracket Installation"

15.5.1 Fulcrum Mount Kit Installation

The Display Control Unit Display Mount Fulcrum interfaces with the Pedestal (ART 700 PED), Fixed Table Mount (ART 700 DCU TM), and Universal Adjustable T-Rail Table Mount (KMA 350).

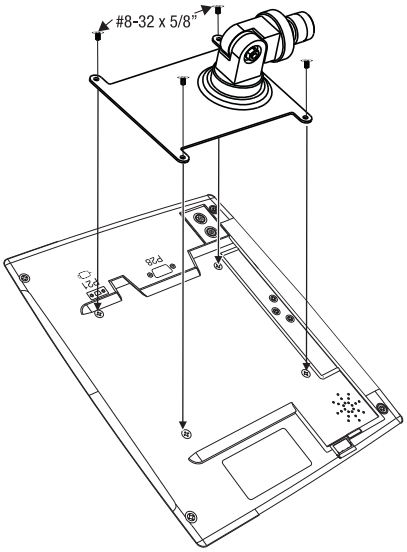

Figure 15 - 14: Attach Fulcrum Plate

15.5.2 Desk Stand Kit Installation

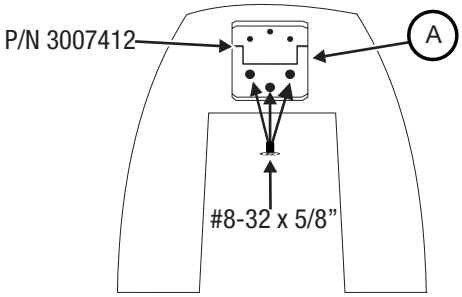

Figure 15 - 15: Attach Bracket (A) to Display Control Unit Stand

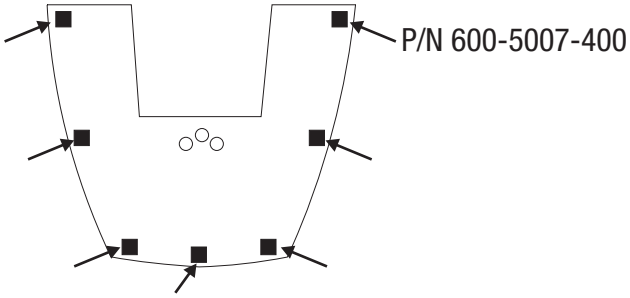

Figure 15 - 16: Attach Rubber Feet

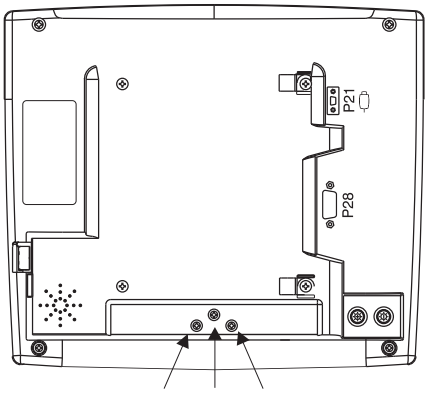

Figure 15 - 17: Display Control Unit Back - Remove Screws

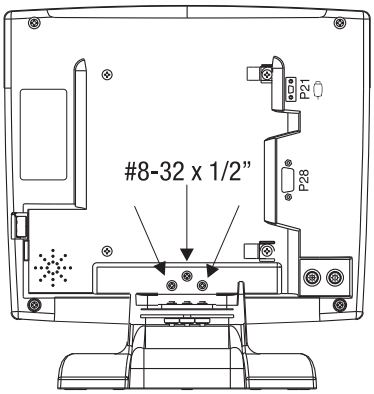

Figure 15 - 18: Display Control Unit Desk Stand Attached

NOTE: Reuse #8-32 1/2” screws removed in Figure 15 - 17: Display Control Unit Back - Remove Screws.

15.5.3 Fixed Table Mount Installation

NOTICE

Electro-Mechanical Hazard - Equipment damage may result.

- Before installing the Table Mount, ensure the table rail can withstand a minimum vertical static load of 18 kg (40 lbs.) Refer to the table manufacturer documentation for weight load information.
- Do not over tighten Table Mount knob.
- Do not force the Table Mount onto the table rail.
- Loosen Table Mount knob prior to removal of components.

The Fixed Table Mount can be used to mount a Display Control Unit using the Fulcrum Mount Bracket kit to a bed rail. The Fixed Table Mount bracket is designed to accommodate rails from 1/4” (6.4mm) to 1/2” (12.7mm) thick and 7/8” (22.2mm) high.

NOTE: The Fixed Table Mount is not intended to support the Injector Head.

1. Slightly angle the Fixed Table Mount bracket towards the center of the table and hook onto the top of the accessory rail.

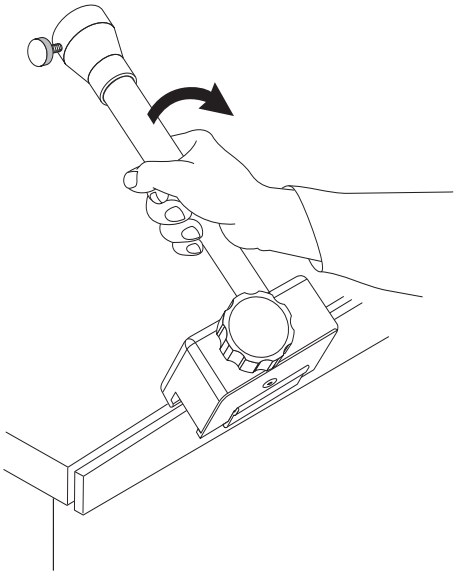

Figure 15 - 19: Attaching the Fixed Table Mount

2. Rotate bracket away from the center of the table until the Mounting Lever engages with table rail.

   NOTE: It may be necessary to adjust the Mounting Lever prior to attachment to get the Mount Lever to engage properly (see step **4** and then return to step **3**).

3. Tighten the Clamp Knob until the Bracket Mount is parallel to the rail.

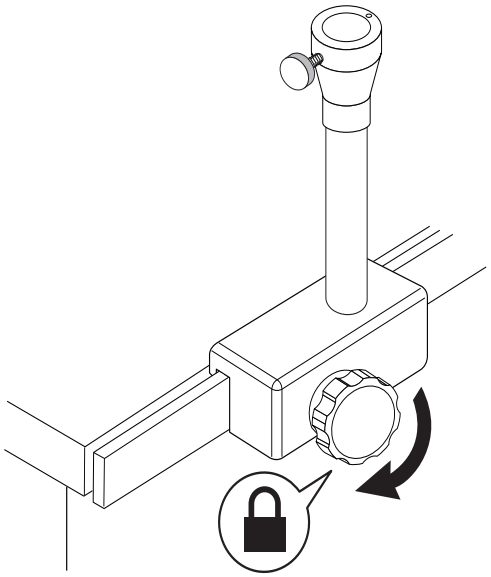

Figure 15 - 20: Tightening the Clamp Knob

4. Using the 3/16” Hex Key provided, turn the adjusting screw (A) clockwise until Mounting Lever (B) contacts the bottom of the rail.

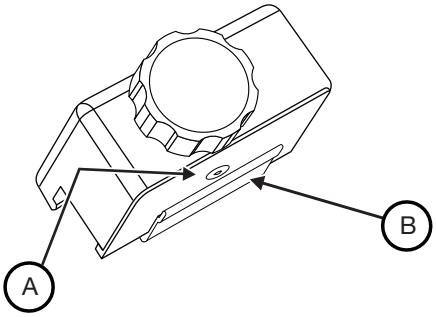

Figure 15 - 21: Adjust Screw and Mounting Lever

5. Turn the same adjusting screw (A) counterclockwise approximately 45 degrees; remove the Hex Key.

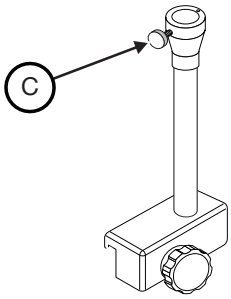

Figure 15 - 22: Table Mount Knob

6. Tighten the Clamp Knob until the Bracket Mount is firmly attached to the rail.
7. Loosen the knob (C) by turning as far as possible counterclockwise.
8. With the Display Control Unit attached to the Fulcrum Mount, insert the Fulcrum Mount pin into the top of the Fixed Table Mount bracket.
9. Secure the Display Control Unit by turning the knob (C) clockwise. When tightened properly, the Display Control Unit should not move when pressing the touch screen.

15.5.4 Wall Mount Bracket Installation

NOTE: Before attaching the bracket to the wall, the installer must know if the wall studs in the room are made of metal or wood. This will determine the kind of hardware required to complete the installation.

NOTE: The bracket must be mounted to a stud to insure a secure mount. Wallboard and wing anchors will not support the weight and movement created by swinging the control console into position during routine use.

NOTE: Do not install the wall mount bracket on a wall which contains shielding unless the installation does not violate the shield.

NOTE: If the wallboard is thicker than 5/8 inch, longer screws must be purchased to insure a secure mount.

1. Hold the bracket with the friction plates on the bottom and position the wall bracket on the wall where it is to be installed and mark the mounting holes. The bracket must be mounted to a stud to insure a secure mount.
2. Drill a 5/32” by 2” deep hole through the wall and into the stud (3/8” hole if there is a metal stud).
3. On metal studs only, place the hollow wall anchors into the holes drilled.
4. Place the wall bracket onto the wall and secure with the fasteners provided. (#12 x 2” screws for wood studs, #10-24 x 2 1/2“screws for metal studs)
5. Remove the four screws from the back of the Display Control Unit.

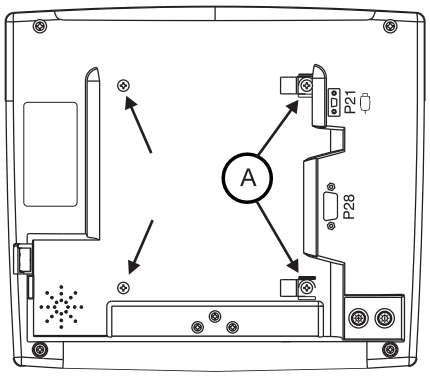

Figure 15 - 23: Remove Screws

6. Leave the cable retainers (A) attached to their respective cables.
7. Place the Display Control Unit onto the plate and secure the Display Control Unit to the bracket with the #8-32 x 5/8” screws provided, as shown in Figure 15 - 24: Wall Mount Screws and Mounted Display Control Unit. Ensure to attach the cable retainer clips to the upper right and lower right holes on the Display Control Unit.

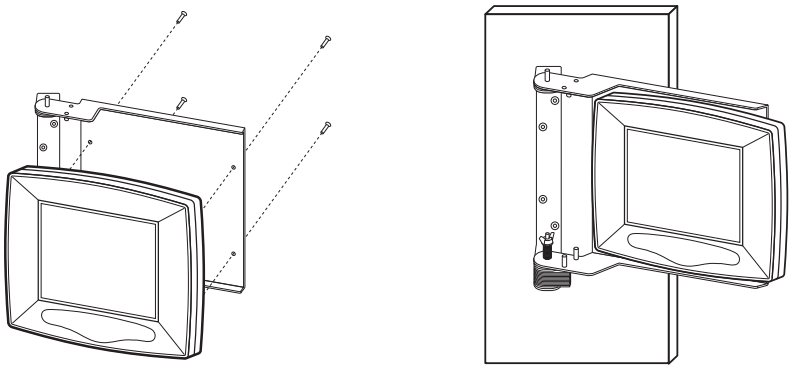

Figure 15 - 24: Wall Mount Screws and Mounted Display Control Unit

8. Connect the cable to the rear of the Display Control Unit (a small flat head screwdriver may be required). Route the Display Control Unit cable toward the Display Control Unit wall bracket hinge.

   NOTE: The minimum bend radius for the cable is five inches.

9. Use the cable ties and cable mounts to fasten the cable to the wall. Allow sufficient length in the Display Control Unit cable to permit full range of movement of the bracket. Route the cable away from the bracket to prevent the cable from becoming pinched in the bracket hinge.

To swing the Display Control Unit from side to side, push up on the bottom of the Display Control Unit. While in this position, the bracket and Display Control Unit swings from side to side.

After the Display Control Unit is positioned, allow the Display Control Unit to drop down to lock into position. A light tap on the top of the Display Control Unit will insure a lock condition.

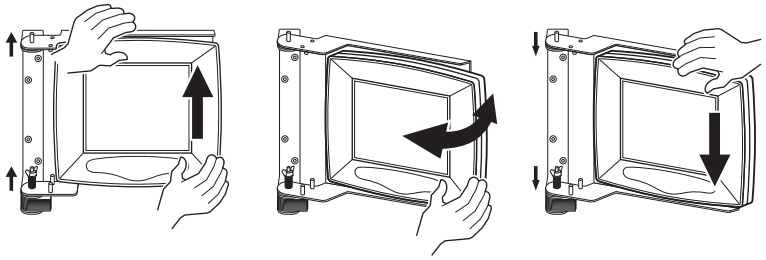

Figure 15 - 25: Positioning a Wall Mounted Display Control Unit

15.5.4.1 Convert Wall Mount Swing Direction

The Display Control Unit Wall Mount Bracket swings from the right. It can be converted to swing from the left.

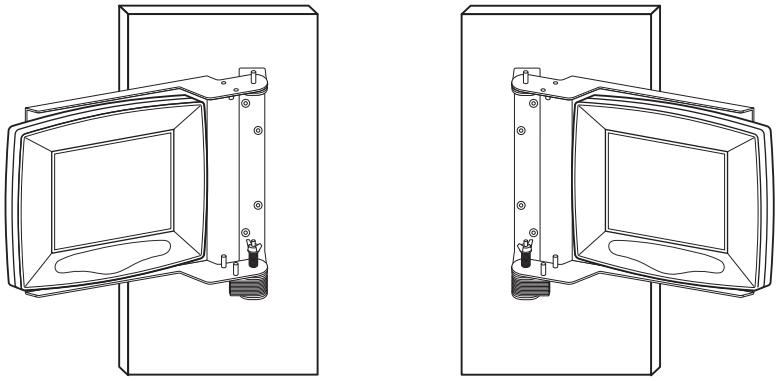

Figure 15 - 26: Swing Right and Swing Left Wall Mount Configurations

1. Remove the Display Control Unit from the wall mount bracket.

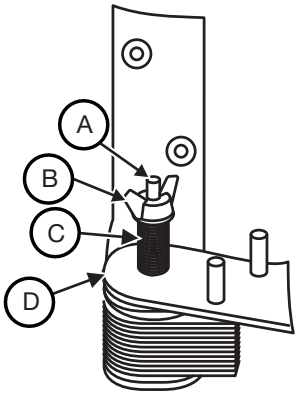

Figure 15 - 27: Wall Mount Friction Plate - Close-up

2. Remove the wing nut (B) from the top of the pivot bolt (A).
3. Remove the washer and spring (C).
4. Lift the mounting plate (D) off of the mounting pins and flip over.
5. Install the spring and washer (C) onto the mounting pin.
6. Install wing nut (B) on mounting bolt (A) and tighten down until it stops.
7. Install the Display Control Unit onto the wall mount bracket.

15.6 Accessory Installation

- "Syringe Heat Maintainer Installation"
- "Syringe Pressure Jacket Installation"
- "Handswitch and Footswitch Installation"
- "Handswitch Mount Kit"
- "Display Control Unit Sterile Sheath Installation"
- "Cable Bracket Installation"

15.6.1 Syringe Heat Maintainer Installation

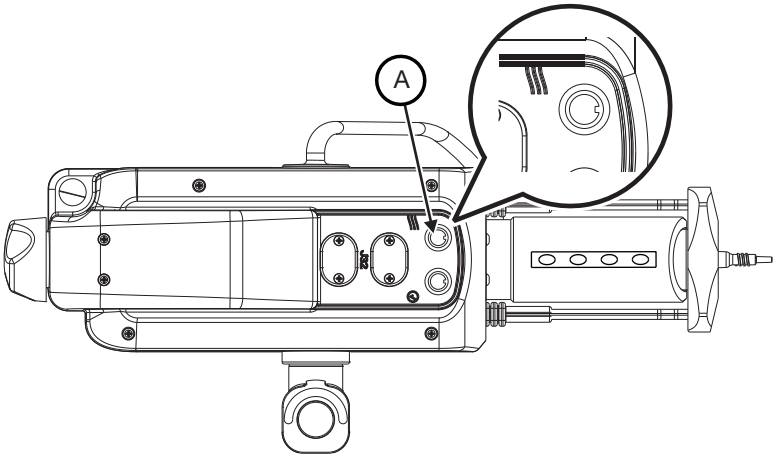

Figure 15 - 28: Syringe Heat Maintainer Port (A)

NOTE: Remove and discard cap covering the port (A).

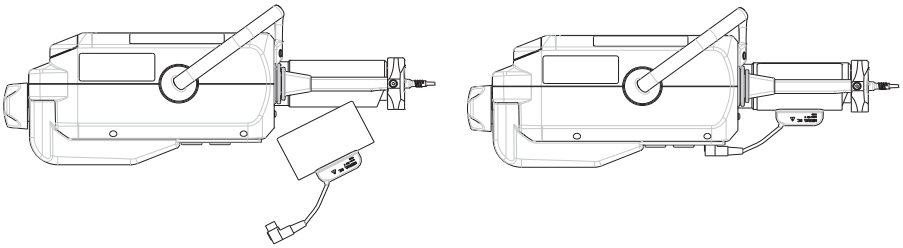

Figure 15 - 29: Syringe Heat Maintainer

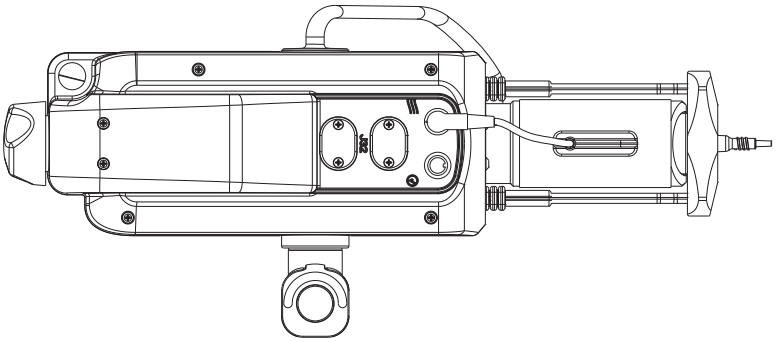

Figure 15 - 30: Syringe Heat Maintainer Connected

15.6.2 Syringe Pressure Jacket Installation

Install the Pressure Jacket on to the front of the injector prior to installing a syringe.

1. Align the slot in the pressure jacket with the protrusion on the front of the injector.
2. Push firmly on the face of the pressure jacket until it snaps on to the injector.
3. Ensure that the syringe interface can close properly.

15.6.3 Handswitch and Footswitch Installation

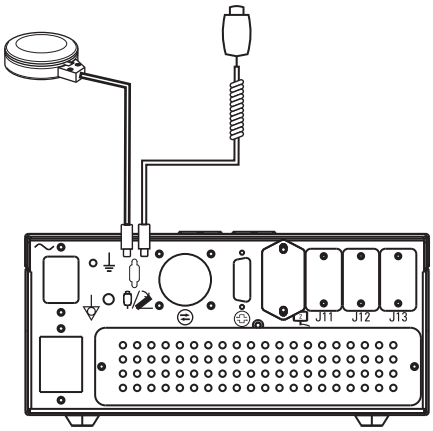

Figure 15 - 31: Handswitch and Footswitch Power Unit Location

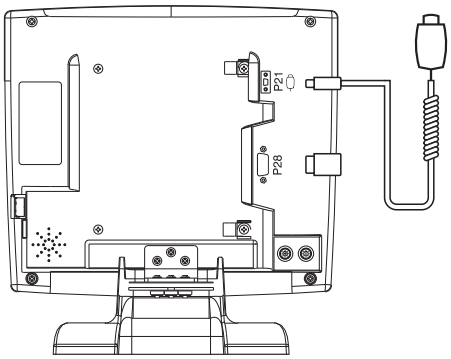

Figure 15 - 32: Handswitch Display Control Unit Location

Figure 15 - 33: Use Clip to Attach Handswitch Cable to the Display Control Unit

15.6.4 Handswitch Mount Kit

The handswitch mount kit contains hardware to allow the operator to mount the handswitch to any flat surface (such as the back of the Display Control Unit) and onto a pole or similarly shaped object.

1. To mount using the metal bracket and double-sided tape,
   a. Attach the handswitch holster (A) to the metal bracket using the included screws.

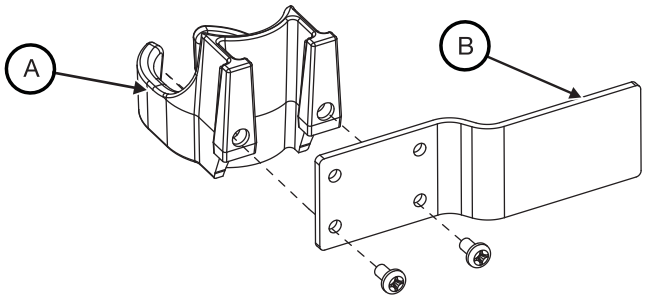

Figure 15 - 34: Handswitch Holster with Bracket

   b. Using the supplied alcohol wipe, thoroughly clean an area on the mounting surface approximately the shape and size of the pre-cut double-sided tape.
   c. Apply a thin film of the included surface primer to the area (B) where it will be mounted and to the metal bracket.

d. Orient as desired prior to applying to surface; the tape will adhere on contact. Apply the double-sided tape to the metal bracket then affix to the prepared surface.

e. Apply firm pressure to fully seat the bracket.

2. To mount the handswitch using the Velcro strap,

a. Feed the Velcro strap through the two slots on the handswitch holster.

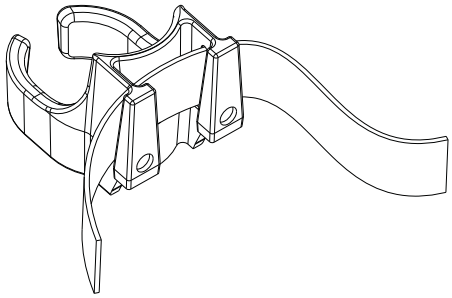

Figure 15 - 35: Handswitch Holster with Velcro

b. Wrap the Velcro strap around a pole or similar object.

c. Ensure strap is snug to prevent the holster from slipping during use. The double-sided tape can also be used between the holster and pole to help prevent slipping.

15.6.5 Display Control Unit Sterile Sheath Installation

⚠WARNING

Biological Contamination Hazard - Serious patient and/or worker injury or death may result.

- Properly discard disposables after use or if contamination may have occurred during setup or use.

⚠CAUTION

Environmental Contamination Hazard - Minor or moderate patient and/or worker injury may result.

- Visually inspect contents and package before use.
- Do not use if package integrity is compromised.
- Follow sterile technique principles when installing the Display Control Unit Sheath.

NOTE: Contents are sterile. Display Control Unit sheath should be applied using sterile technique.

The Mark 7 Arterion Display Control Unit Sterile Sheath is intended for single patient use.

1. Use sterile technique to open the Display Control Unit Sterile Sheath package.
2. Slip the sheath over the Display Control Unit.
3. Ensure the sheath completely covers the Display Control Unit.

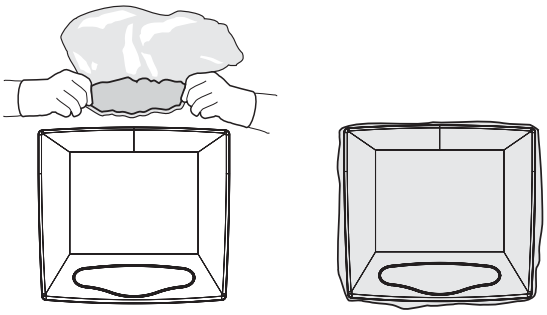

Figure 15 - 36: Sheath Installation

15.6.6 Cable Bracket Installation

⚠CAUTION
Mechanical Hazard - Minor or moderate patient and/ or worker injury may result. • Do not create a trip hazard when installing cable bracket.

- "Table Cable Bracket Installation"
- "Floor Cable Bracket Installation"

15.6.6.1 Table Cable Bracket Installation

The Table Cable Bracket, cable insert, and panel mount plate, can be installed using the bracket and insert only, or bracket and panel mount plate.

- "Installing the Bracket and Insert"
- "Installing the Insert Only"
- “Installing the Bracket and Panel Mount Plate”

15.6.6.1.1 Installing the Bracket and Insert

NOTE: Before drilling, check clearance behind the desired mounting location inside the table. Ensure that no cables or other hardware will interfere with the installation and function of the Table Cable Bracket.

1. Pre-drill mounting holes (if not already provided on the table) using the Table Mount Cable Bracket Hole Template provided in Appendix A as a guide.

   NOTE: DO NOT photocopy the template as photocopying may distort the image. ALWAYS MEASURE BEFORE DRILLING.

2. Route MEDRAD® Mark 7 Arterion Injection System Injector Head Extension Cable and Display Control Unit Cable through the table opening.
3. Locate the Table Cable Bracket (A). Remove the four screws (B) attaching the insert to the bracket.

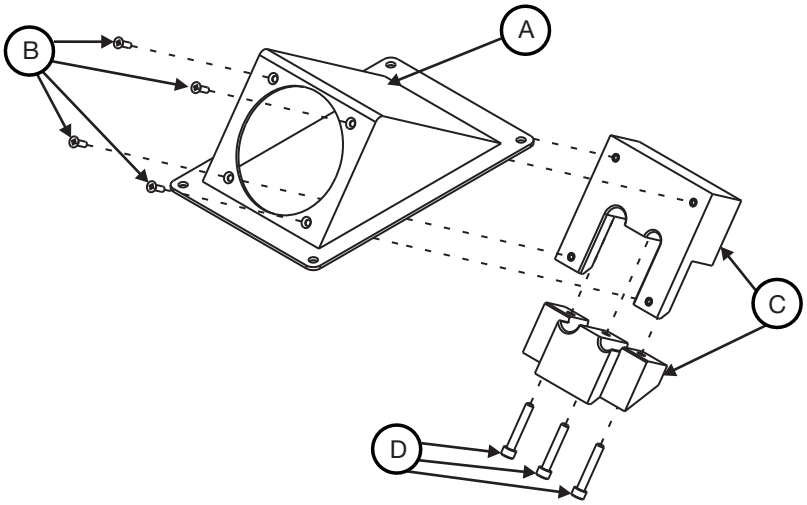

Figure 15 - 37: Table Cable Bracket Assembly

4. Disassemble the insert (C) by removing the socket head screws (D).
5. Insert and route cables through the bracket opening.
6. Attach the top of the insert (C) to the bracket.
7. Align the cables in the corresponding sized slots in the insert. Leave 4 to 6 inches of the Injector Head Extension Cable extending beyond the opening of the bracket. Leave a suffi-

cient length of the Display Control Unit Cable extending beyond the opening of the bracket to connect to the Display Control Unit in the desired location.

NOTE: When installing only one cable, insert the appropriate sized plug (included) into the empty hole.

8. Re-assemble the insert (C) using the socket head screws (D) removed in step **4**.
9. Mount the bracket to the table using existing hardware if already available on table. Use the included #8 sheet metal screws if no existing hardware is available.

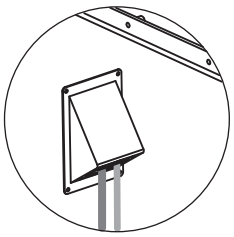

Figure 15 - 38: Table Mount Mounted to Table

NOTE: The minimum bend radius for the Injector Head Extension Cable is seven inches and five inches for the Display Control Unit Cable.

15.6.6.1.2 Installing the Insert Only

NOTE: Before drilling, check clearance behind the desired mounting location inside the table. Ensure that no cables or other hardware will interfere with the installation and function of the Table Cable Insert.

1. Pre-drill mounting holes using the Table Mount Cable Maintenance Insert Hole Template provided in Appendix A.
2. Route Injector Head Extension Cable and Display Control Unit Cable through the opening on the table.
3. Locate the Table Cable Bracket and disassemble. Remove the four screws attaching the insert to the bracket.
4. Attach the top of the insert to the inside of the opening.
5. Align the cables in the corresponding sized slots in the insert. Leave 4 to 6 inches of the Injector Head Extension Cable extending beyond the opening of the bracket. Leave a sufficient length of the Display Control Unit Cable extending beyond the opening of the bracket to connect to the Display Control Unit in the desired location.

   NOTE: When installing only one cable, insert the appropriate sized plug (included) into the empty hole.
6. Attach the bottom of the insert to the top of the insert.

   NOTE: The minimum bend radius for the Injector Head Extension Cable is seven inches and five inches for the Display Control Unit Cable.

15.6.6.1.3 Installing the Bracket and Panel Mount Plate

⚠CAUTION
Mechanical Hazard - Minor or moderate patient and/ or worker injury may result. • Do not create a trip hazard when installing cable bracket.

NOTE: Before drilling, check clearance behind the desired mounting location inside the table. Ensure that no cables or other hardware will interfere with the installation and function of the Table Cable Bracket.

1. Pre-drill mounting holes (if not already provided on the table) using the Table Mount Cable Bracket Hole Template provided in Appendix A as a guide.

NOTE: DO NOT photocopy the template as photocopying may distort the image. ALWAYS MEASURE BEFORE DRILLING.

2. Route MEDRAD® Mark 7 Arterion Injection System Injector Head Extension Cable and Display Control Unit Cable through the table opening.
3. Locate the Table Cable Bracket (A). Remove the four screws (B) attaching the insert to the bracket. Control Unit Cable through the table opening.

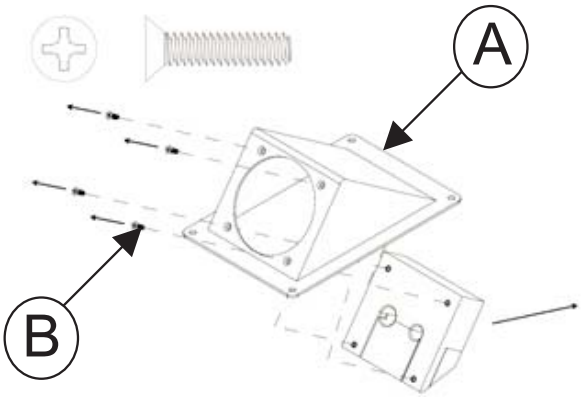

Figure 15 - 39: Table Cable Bracket Assembly

4. Discard the screws and the insert.
5. Align the cable connectors to the corresponding sized slots in the mount plate.

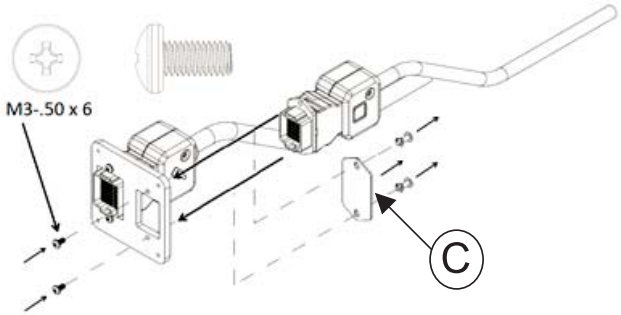

Figure 15 - 40: Attach Cables to Panel Mount Plate

NOTE: If attaching the DCU cable, remove the cover plate (C) from the plate.

6. Insert the cables connectors in the corresponding sized holes in the plate.
7. Attach the Panel Mount Plate to the bracket using the four 4-40 flat head, thread cutting screws.

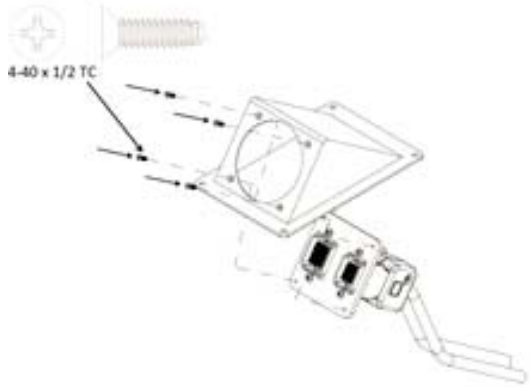

Figure 15 - 41: Mount Plate to Bracket

8. Mount the bracket to the table using existing hardware if already available on the table. Use the included #8 sheet metal screws if no existing hardware is available.

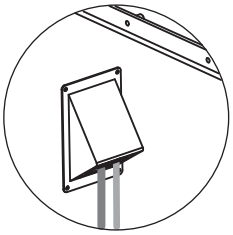

Figure 15 - 42: Table Mount Mounted to Table

NOTE: The minimum bend radius for the Injector Head Extension Cable is seven inches and five inches for the Display Control Unit CAble.

15.6.6.2 Floor Cable Bracket Installation

NOTE: Before drilling, check clearance behind the desired mounting location on the floor. Ensure that no cables or other hardware will interfere with the installation and function of the Floor Cable Bracket.

1. Pre-drill mounting holes using the template provided in Floor Mount Cable Bracket Hold Template in Appendix A as a guide.

   NOTE: DO NOT photocopy the template as photocopying may distort the image. ALWAYS MEASURE BEFORE DRILLING.

2. Thread Mark 7 Arterion Injection System Injector Head Extension Cable and Display Control Unit Cable through the floor opening.

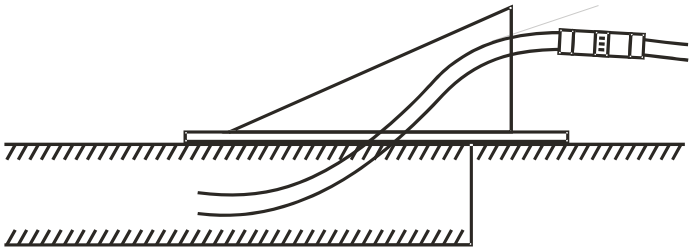

Figure 15 - 43: Cable Routing for Extension Cables

NOTE: Avoid routing extension cables with high power cables.

3. Locate the Floor Cable Bracket (A). Remove the four screws (B) attaching the insert to the bracket.

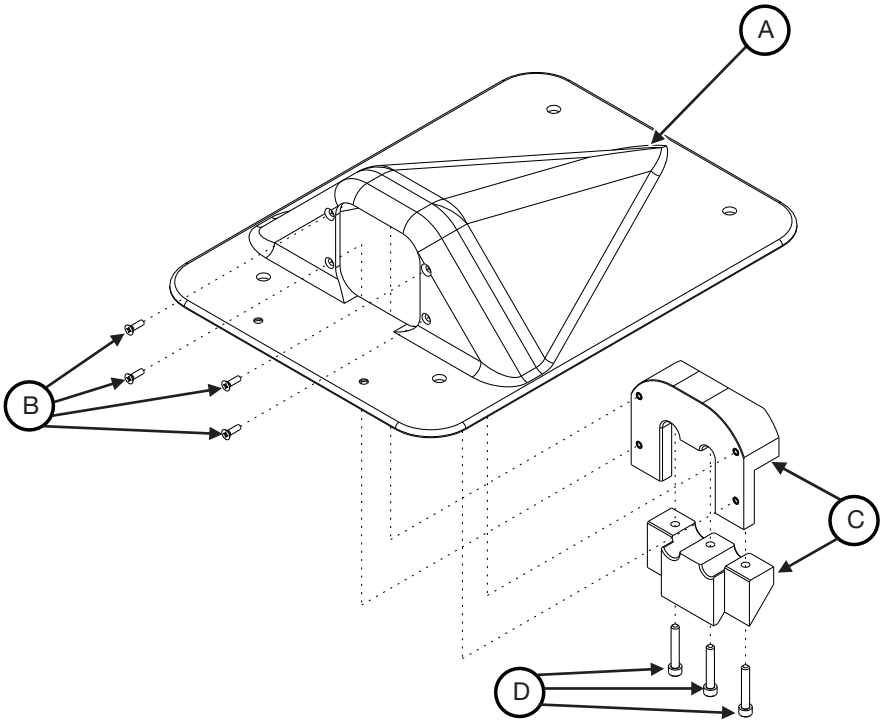

Figure 15 - 44: Floor Cable Bracket Assembly

4. Disassemble the insert (C) by removing the three socket head cap screws (D).
5. Route extension cables through the opening in the floor bracket and the cable insert.
6. Attach the top of the cable insert to the bracket using the four #4-40 x 3/8” screws (B).
7. Align the cables in the corresponding sized slots in the insert. Leave a sufficient length of the Display Control Unit Cable and Injector Head Extension Cable extending beyond the opening of the bracket to connect to the Display Control Unit and Injector Head in the desired locations.

   NOTE: When installing only one cable, insert the appropriate sized plug (included) into the empty hole.

8. Attach the bottom of the insert to the top of the insert using the socket head cap screws (D). Ensure that the top and bottom of the insert are fully seated to each other.
9. Apply RTV to the underside of the mounting bracket.
10. Mount the bracket to the floor. Hardware is included to mount the bracket to either concrete or to wooden floors.

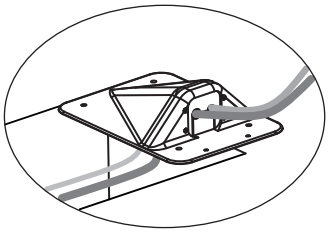

Figure 15 - 45: Floor Mount Mounted to Floor

NOTE: The minimum bend radius for the Injector Head Extension Cable is seven inches and five inches for the Display Control Unit Cable.

15.6.6.2.1 Installing the Floor Bracket and Panel Mount Plate

⚠CAUTION
Mechanical Hazard - Minor or moderate patient and/ or worker injury may result. • Do not create a trip hazard when installing cable bracket.

NOTE: Before drilling, check clearance behind the desired mounting location on the floor. Ensure that no cables or other hardware will interfere with the installation and function of the Floor Cable Bracket.

1. Pre-drill mounting holes using the template provided in Floor Mount Cable Bracket Hole Template in Appendix A as a guide.

   NOTE: DO NOT photocopy the template as photocopying may distort the image. ALWAYS MEASURE BEFORE DRILLING

2. Thread Mark 7 Arterion Injection System Injector Head Extension Cable and Display Control Unit Cable through the floor opening.

   NOTE: Avoid routing extension cables with high power cables.

3. Locate the Floor Cable Bracket (A). Remove the four screws (B) attaching the insert to the bracket.

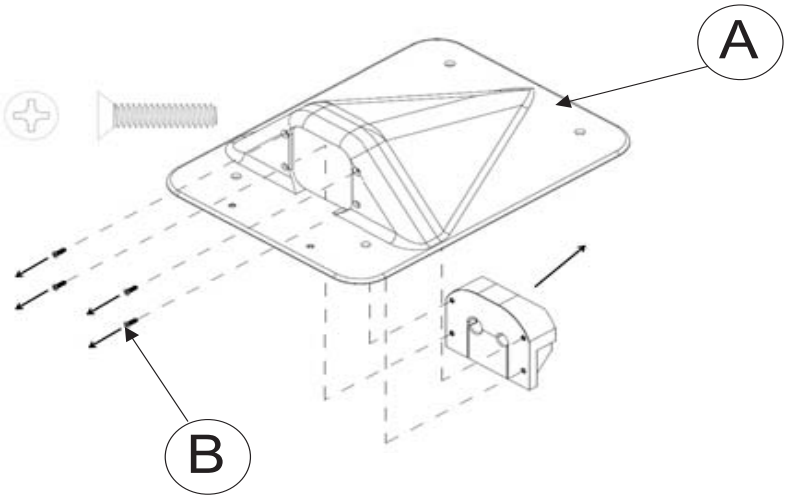

Figure 15 - 46: Floor Cable Bracket Assembly

4. Discard the screws and the insert.
5. Remove the cable strain relief from the cables to be mounted as shown below.

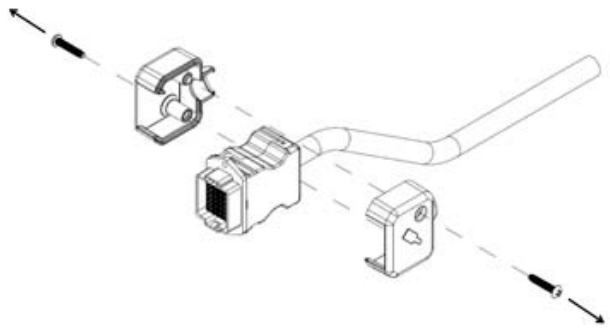

Figure 15 - 47: Cable Strain Relief Removal

6. Insert the cables connectors in the corresponding sized holes in the plate.

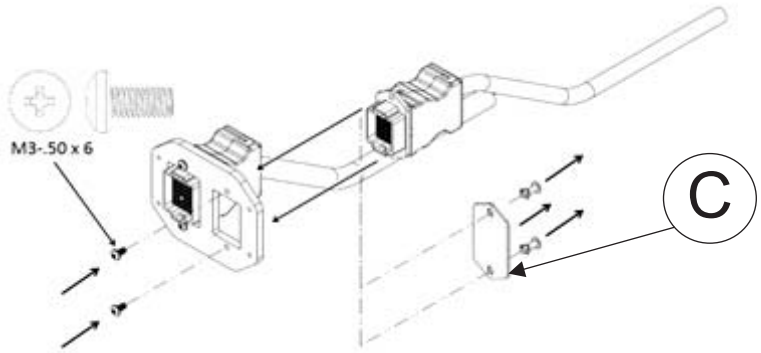

Figure 15 - 48: Removing Cable Plate

NOTE: If attaching the DCU cable, remove the cover plate (C) from the plate.

7. Attach the Panel Mount Plate to the bracket using the four 4-40 flat head, thread cutting screws.

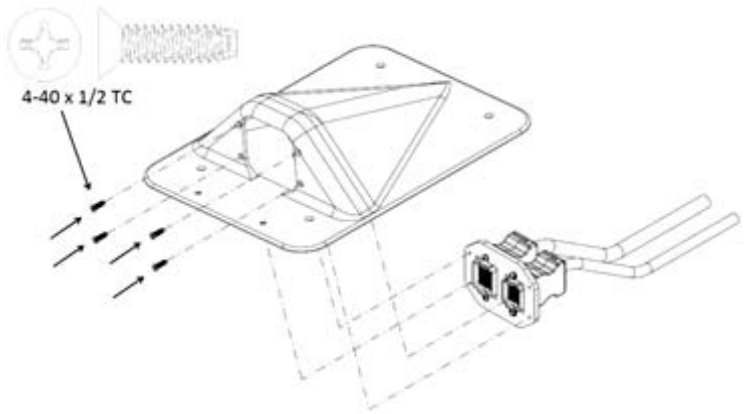

Figure 15 - 49: Mount Plate to Bracket

8. Apply RTV to the underside of the mounting bracket.
9. Mount the bracket to the floor. hardware is included to mount the bracket to either concrete or to wooden floors.

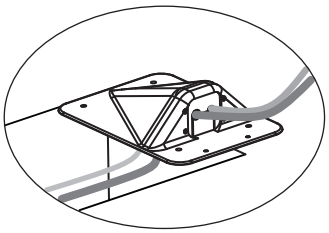

Figure 15 - 50: Floor Mount Mounted to Floor

NOTE: The minimum bend radius for the Injector Head Extension Cable is seven inches and five inches for the Display Control Unit Cable.

15.7 Stand Mounting Kit Installation

The Mark 7 Arterion Pedestal Mounting Kit is for use with the KMA 320 RT and the KMA 330.

NOTE: Ensure the KMA 320 RT and KMA 330 have five (5) locking casters. If the stand does not have five locking casters, contact service for part number 699-4645-100.

15.8 Power Unit Bracket Installation

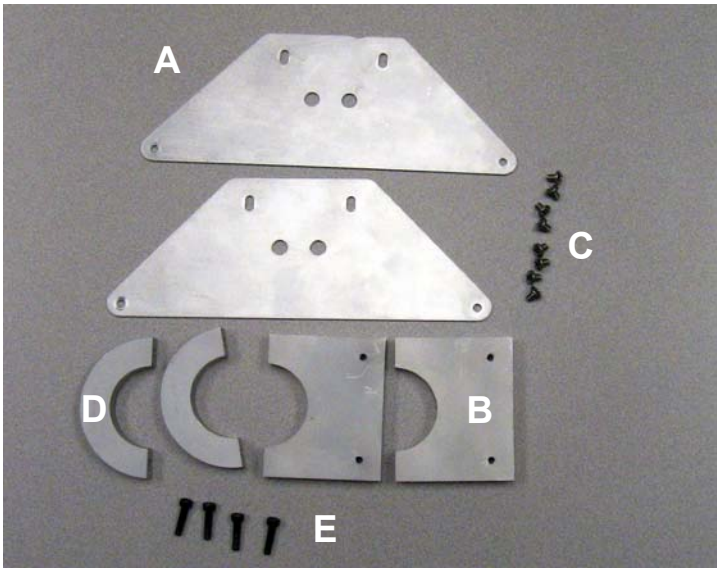

1. Rotate the Pedestal Arm counterclockwise until you hit the stop.
2. Attach Power Unit Mounting Bracket Plate (A) to the Power Unit Tube Clamp (B) using two 10-32 x 3/8 pan head Phillips screws.(C)
3. Repeat step **2**.
4. Attach the assembled Power Unit Brackets to the top and bottom of the Power Unit.

   NOTE: The screw head aligns with the hole in the bracket plate.

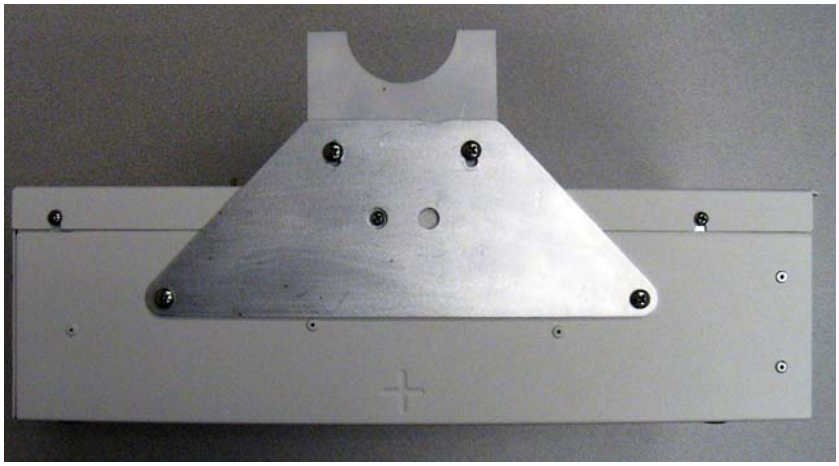

5. Lock the casters on the pedestal.
6. Position Power Unit on the stand as shown below.

7. Loosely attach the Crescent Clamp (D) to the bottom half of the Tube Clamp using two 10-32 x 3/4 socket head screws (E) and 3/16 hex key.
8. Loosely attach the Crescent Clamp (D) to the top of the Tube Clamp using two 10-32 x 3/4 socket head screws (E) and 3/16 hex key. The Power Unit should be resting on the lowest point of the stand.
9. Align the Power Unit as shown below and securely tighten the clamps.

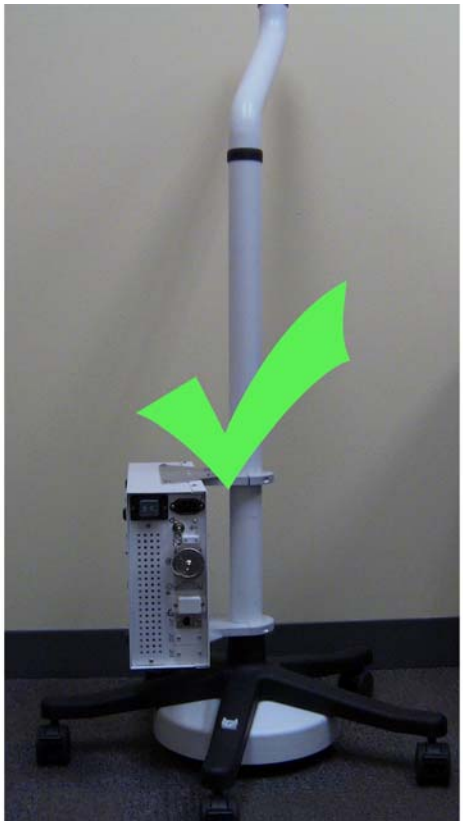

15.9 Display Control Unit (DCU) Support Assembly Installation

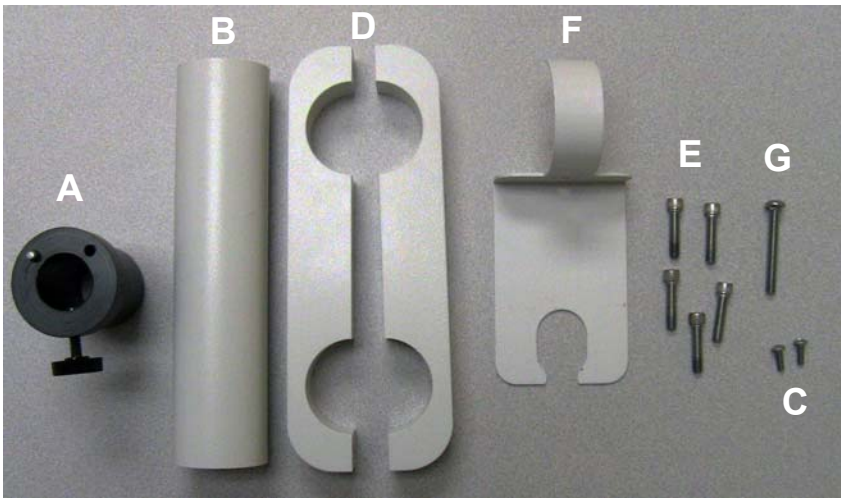

1. Insert the DCU Mounting Bushing (A) into the DCU Support Post (B).
2. Align holes and secure with two 8-32 x 3/8 Phillips screws (C) using a #2 Phillips screw driver. Do not overtighten.

3. Ensure the Pedestal Arm has been rotated counterclockwise until you hit the stop.
4. Locate two DCU Mounting Bracket halves (D).
5. Orient halves together ensuring each threaded hole lines up with a through hole.
6. Position the DCU Mounting Bracket around the DCU post so that the bottom is approximately 41 inches from the ground.

7. Insert and loosely fasten one 1/4-20 x 1-1/4 screw (E) in the hole closest to the Stand Post.
8. Insert the assembled DCU Support Post into open hole of the DCU Mounting Bracket so that the stop pin (H) is away from the Stand Post and bottom of the post is flush with the support. See image below.

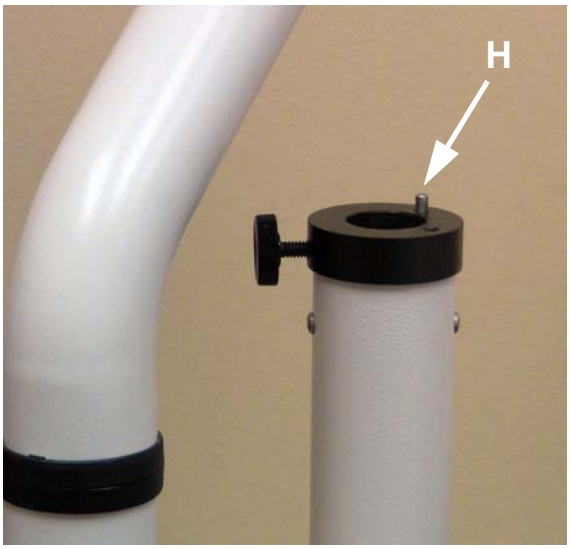

9. Insert and fasten one 1/4-20 x 1-1/4 screw (E) on the DCU Mounting Bracket into the hole closest to the DCU Support Post.
10. Rotate DCU Support Bracket so that the bracket is positioned directly under the Pedestal Arm.
11. Insert two 1/4-20 x 1-1/4 screws (E) into holes at ends of the DCU Mounting Bracket.
12. Position the handswitch and cable management (I) in between the DCU Support Post and stand as shown below

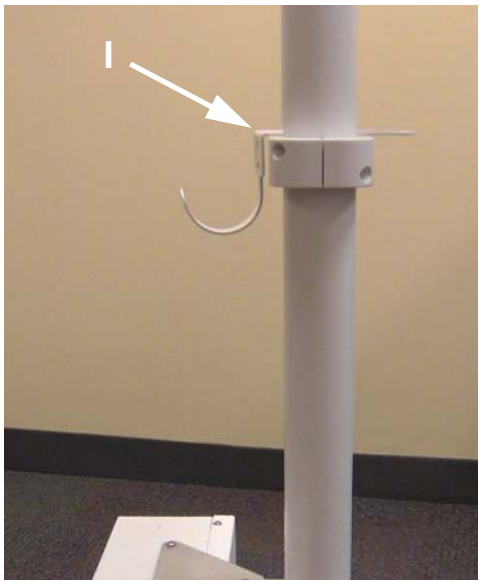

13. Insert the 1/4-20 x 1 button head cap screw (G) and tighten.
14. Insert the remaining 1/4-20 x 1-1/4 screws (E) into the remaining holes on the DCU Mounting Bracket.
15. Securely tighten all of the 1/4-20 x 1-1/4 screws on the DCU Mounting Bracket.

16 Installation - ISI

NOTICE
Electro-Mechanical Hazard - Equipment damage may result. • Follow Electrostatic Discharge (ESD) protection practices. • Disconnect the power cord before removing or replacing PC boards.

The MEDRAD® Mark 7 Arterion Injection System is configured for Universal ISI operations when shipped from the factory. Interfacing a MEDRAD® Mark 7 Arterion Injection System to certain Siemens scanner systems requires harness changes.

For Siemens Axiom Artis with ODU and Cios Alpha system, refer to "16.1 - Siemens Axiom Artis with ODU and Cios Alpha System". For Siemens with Z5 connector, refer to "16.2 - Siemens Systems with Z5 Connector".

16.1 Siemens Axiom Artis with ODU and Cios Alpha System

When interfacing the Mark 7 Arterion Injection System to the Siemens Axiom Artis with ODU or Cios Alpha, internal Power Unit ISI changes are required. This interface requires that the internal Power Unit ISI connector be moved to the Siemens connector P404, prior to applying power to the Siemens equipment.

- **Axiom Artis with ODU** - a Bayer XMC 977A / 3012642 / 59883848 interface cable is required for this installation to connect the Injection System to the scanner.
- **Cios Alpha** - Siemens provided AS11154936 external interface cable is required for this installation to connect the Injection System to the scanner.

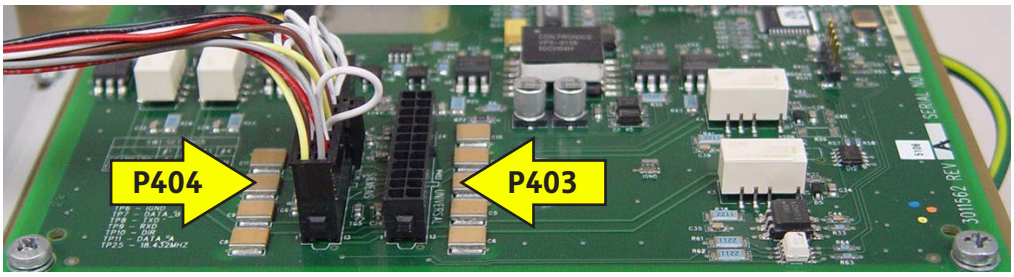

Figure 16 - 1: ISI Harness Connection to P404 - Siemens Axiom Artis with ODU and Cios Alpha

16.1.1 Step 1: Remove Power Unit Cover

1. Remove any cables attached to Power Unit module.
2. Remove the fourteen screws securing the external perimeter of the cover (not connector screws).

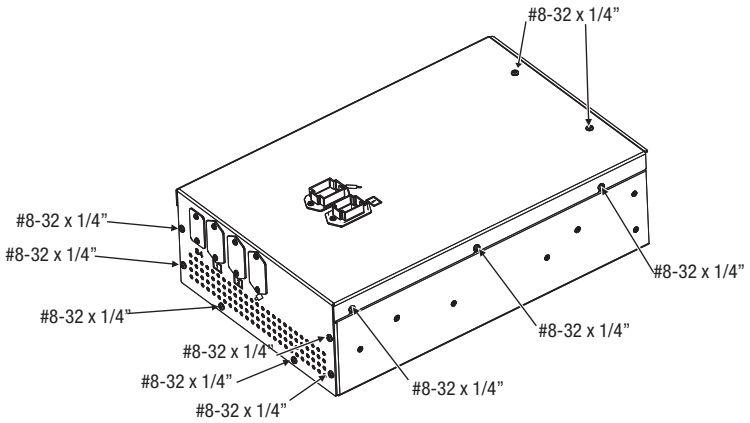

3. Carefully lift the cover up.
4. To remove connectors from the back side of connectors, push in tabs and slide connector out. The frame remains in the cover.

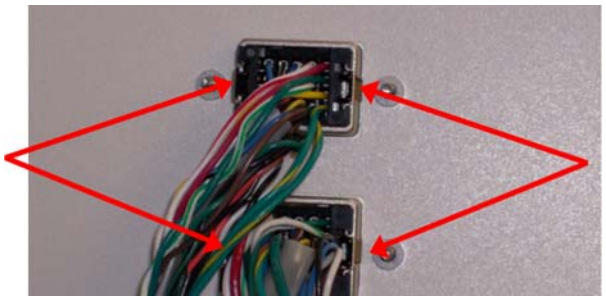

5. Remove cover.

16.1.2 Step 2: Relocate Power Unit ISI Connector

1. Disconnect the Power Unit Universal ISI Cable connector from the ISI PCB Universal connector P403.
2. Connect the Power Unit Universal ISI Cable connector into ISI PCB connector P404.

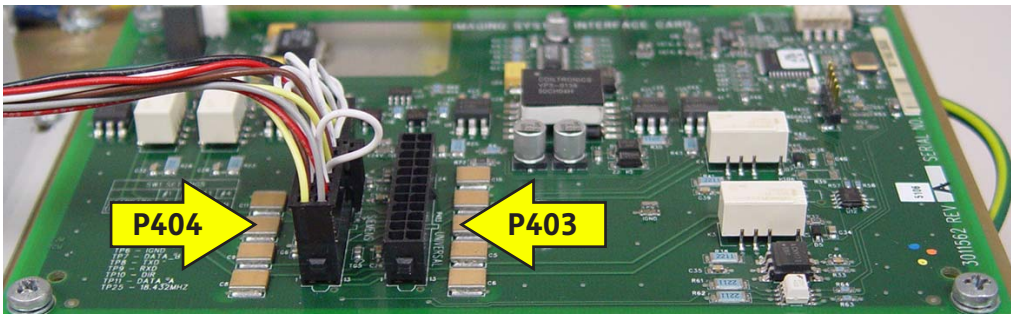

16.1.3 Step 3: Re-install Power Unit Cover

1. Install connectors into connector bodies in top cover. They are keyed to be installed one way. Push until they snap into place.
2. Install cover and secure with fourteen screws previously removed.

16.1.4 Step 4: Complete Leakage Check and Operational Checkout

1. Complete “Checking Leakage” per Section 4.3.2 of the MEDRAD® Mark 7 Arterion Service Manual.

2. Enable ISI and check for errors.
   a. Ensure that the interface cable is securely connected to both the imaging system and the injector.
   b. Refer to "9.9 - Turning ISI On or Off".
      i. Enable ISI and verify that the ISI Active appears in the lower center of the screen.
      ii. Verify a fixed flow injection can be performed using the appropriate start mechanism for the specific OEM imaging system.

16.2 Siemens Systems with Z5 Connector

When interfacing the MEDRAD® Mark 7 Arterion Injection System to the Siemens with Z5 connector system, internal power unit ISI changes are required. Siemens systems listed below utilize the Z5 connector:

- Multistar
- Angiostar
- Polystar
- BICOR
- COROSKOP

Figure 16 - 2: Z5 Connector

This interface requires the standard internal power unit ISI harness to be replaced with Bayer cable 3016360 / 60163802 (ordered separately) prior to applying power to the Siemens equipment. The main connector is connected to the ISI card connector P404. The secondary connector (one wire) is connected to the ISI card connector P403 (universal).

A Bayer XMP 970A / 3016359 / 59888424 interface cable is required for this installation to connect the injection system to the scanner.

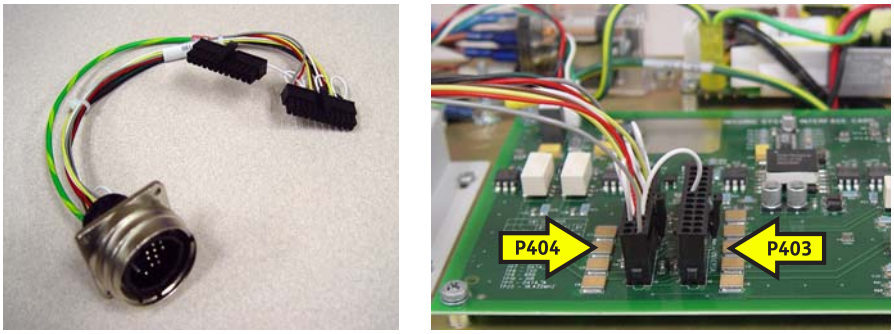

Figure 16 - 3: Optional Harness 3016360 / 60163802 (left);
Optional Harness ISI connections to P404 and P403 (right)

16.2.1 Step 1: Remove Power Unit Cover

1. Remove any cables attached to the Power Unit module.
2. Remove the fourteen screws securing the external perimeter of the cover (not connector screws.)

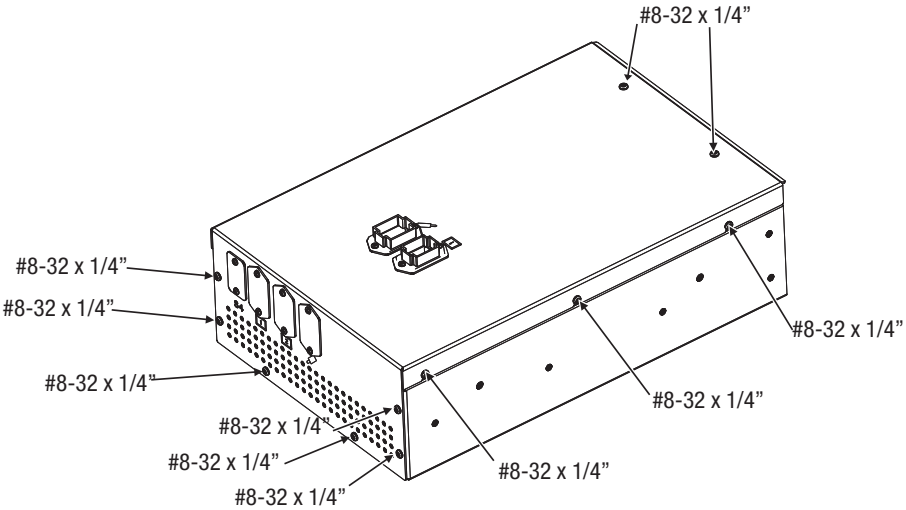

3. Carefully lift the cover up.
4. To remove connectors from the back side of connectors, push in tabs and slide connector out. The frame remains in the cover.

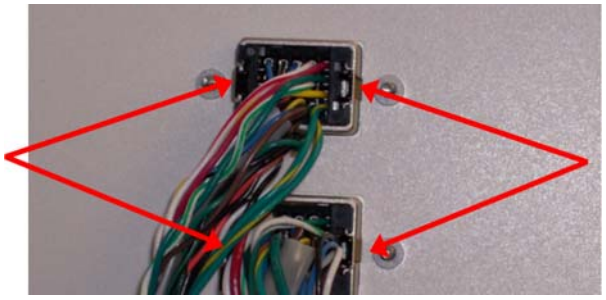

5. Remove cover.

16.2.2 Step 2: Remove Internal Power Unit Universal ISI Cable Assembly

1. Rotate to remove ISI bulk head cover, if attached.

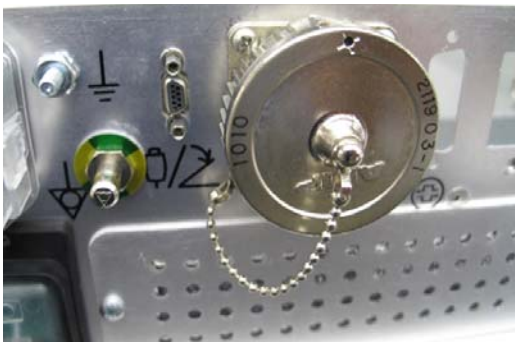

2. Remove quantity 4, 4-40 x 3/8 Philips head screws securing the ISI Bulk Head connector and cover with chain, retaining screws for later attachment.

3. Disconnect the power unit universal ISI cable connector from the ISI PCB universal connector P403.
4. Disconnect the power unit universal ISI cable ground lead and remove cable assembly from chassis.

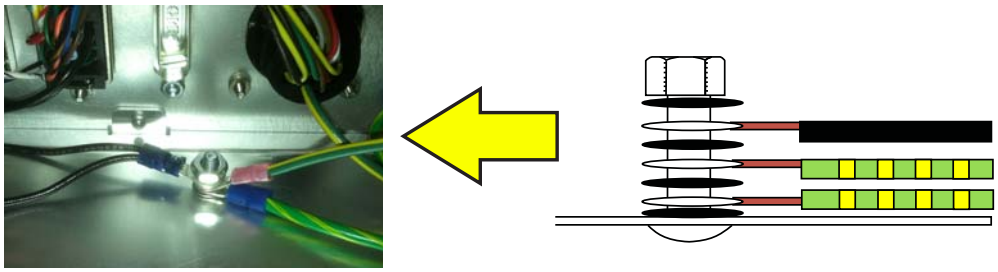

16.2.3 Step 3: Install Internal Power Unit Siemens ISI Cable Assembly, Bayer Cable 3016360/60163802

1. Attach the power unit Siemens ISI cable (3016360/60163802), bulk head connector, and cover with chain using the quantity 4, 4-40 x 3/8 Philips head screws.
2. Connect the power unit Siemens ISI cable (3016360/60163802) connectors to the ISI PCB P403 and P404 connectors.

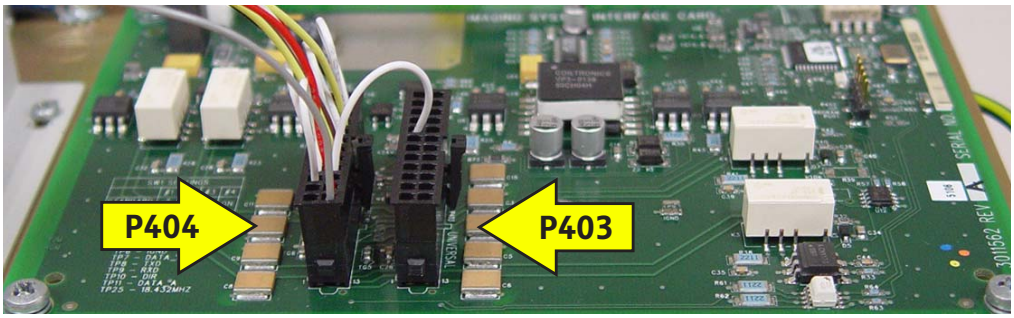

3. Connect the power unit Siemens ISI cable (3016360/60163802) ground lead.

16.2.4 Step 4: Re-Install Power Unit Cover

1. Install connectors into connector bodies in top cover. They are keyed to be installed one way. Push until they snap into place.
2. Install cover and secure with fourteen screws previously removed.

16.2.5 Step 5: Complete Leakage Check and Operational Checkout

1. Complete “Checking Leakage” per the MEDRAD® Mark 7 Arterion Service Manual.
2. Enable ISI and check for errors.
   a. Ensure that the interface cable is securely connected to both the imaging system and the injector.
   b. Refer to Section "9.9 - Turning ISI On or Off".
      i. Enable ISI and verify the “ISI Active” symbol appears in the lower center screen.
      ii. Verify a fixed flow injection can be performed using the appropriate start mechanism for the specific OEM imaging system.

17 Specifications

This chapter lists:

- "System Component Weights and Dimensions"
- "Mounting Components Weights and Dimensions"
- "ISI Technical Specifications"
- "Environmental Specifications"

17.1 System Component Weights and Dimensions

NOTE: All listed weights and dimensions are approximate.

17.1.1 Pedestal System Weight and Dimensions

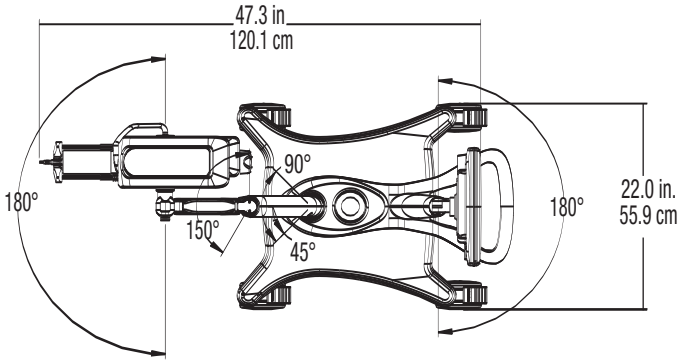

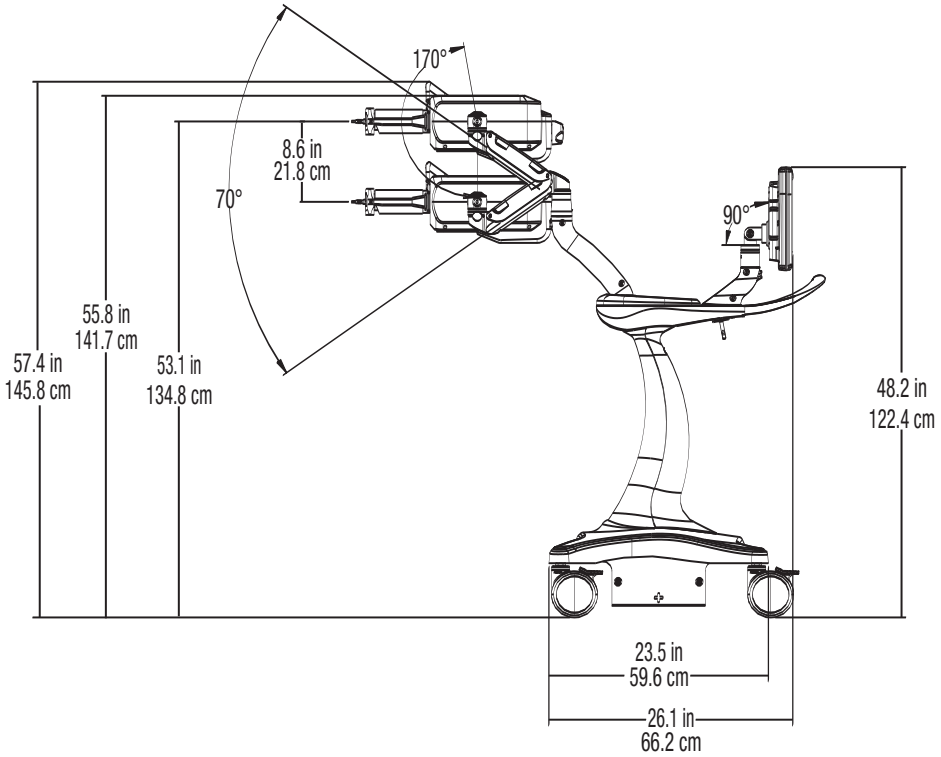

Weight: 146 lbs. (66.22 kg)

17.1.2 Display Control Unit Weight and Dimensions

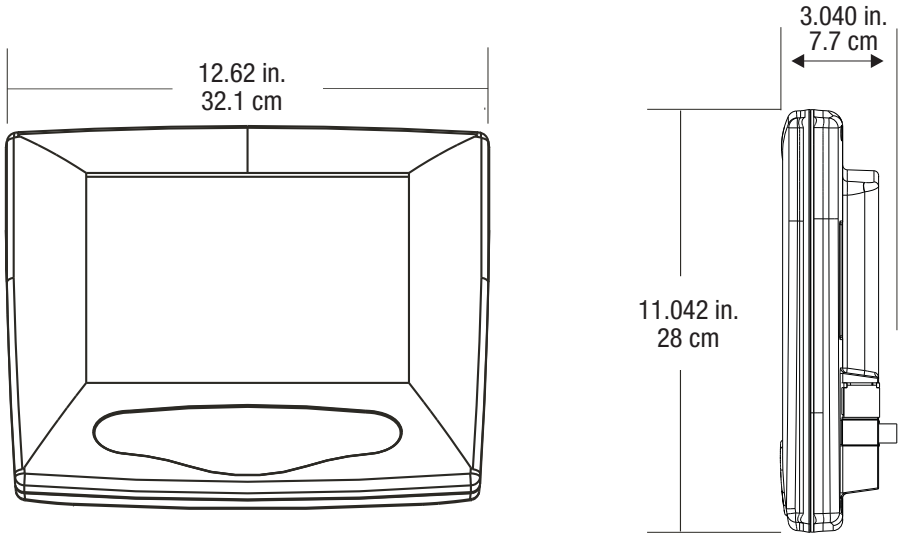

Weight: 7lbs. (3.18kg)

17.1.3 Injector Head Weight and Dimensions

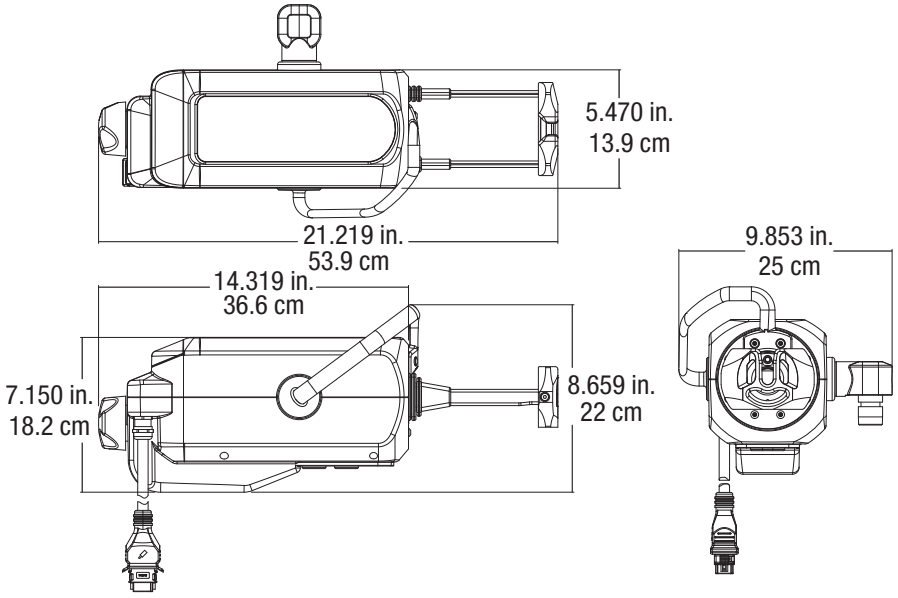

Weight: 18lbs. (8.16 kg)

17.1.4 Power Unit Weight and Dimensions

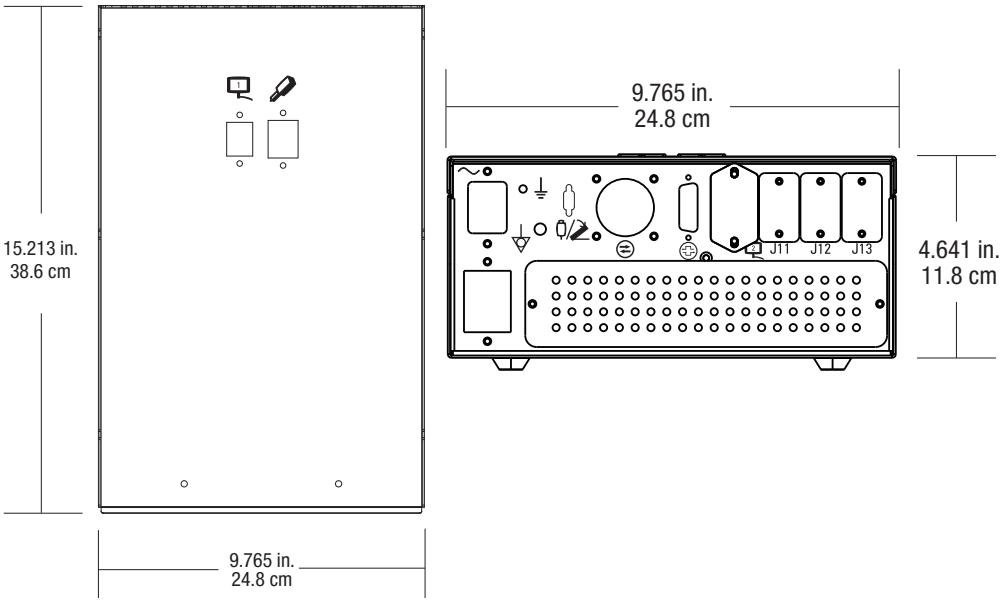

Weight: 11 lbs. (4.99 kg)

17.2 Mounting Components Weights and Dimensions

NOTE: All listed weights and dimensions are approximate.

17.2.1 Pedestal Mount Weight and Dimensions

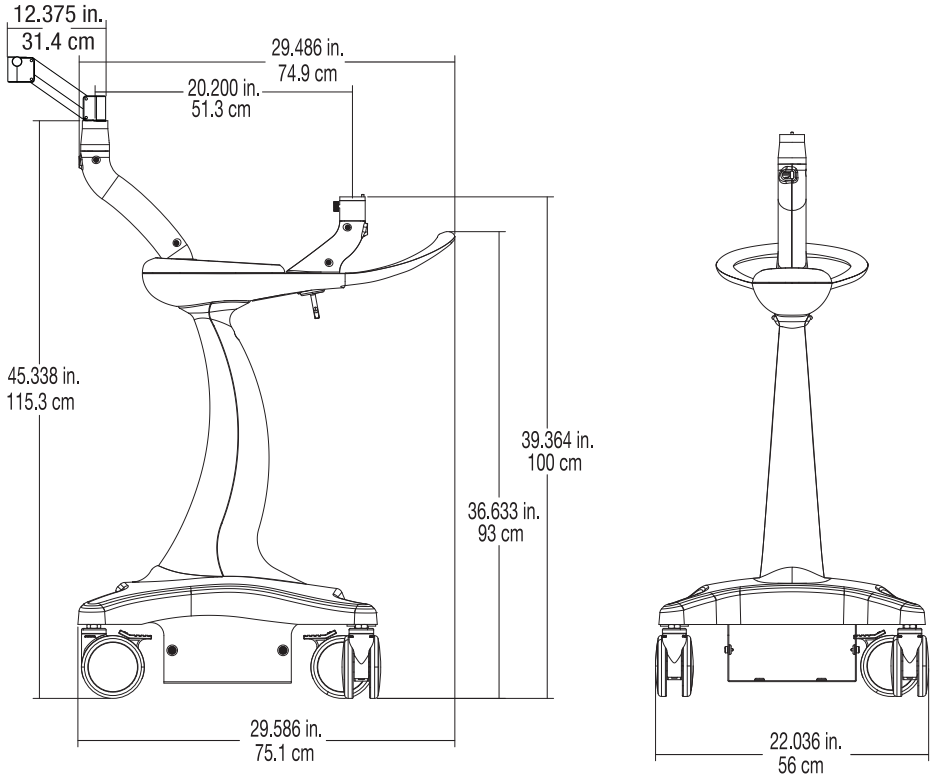

Weight*: 100 lbs. (45.35 kg)

*Weight does not include the Injector Head, Display Control Unit, or Power Unit weights.

17.2.2 Head Stand Weight and Dimensions

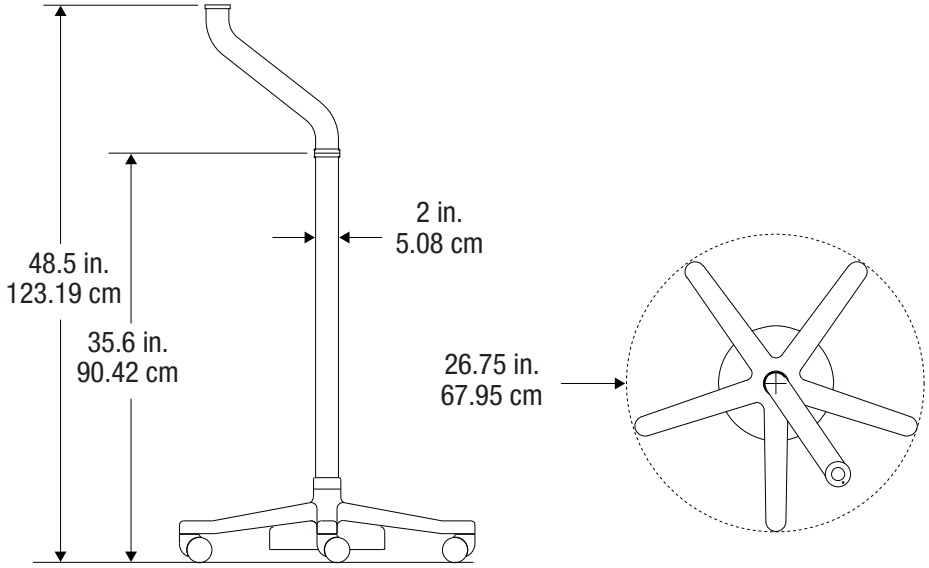

Weight*: 51.4 lbs. (23.32 kg)

*Weight does not include the Injector Head weight.

17.2.3 Adjustable Height Stand Weight and Dimensions

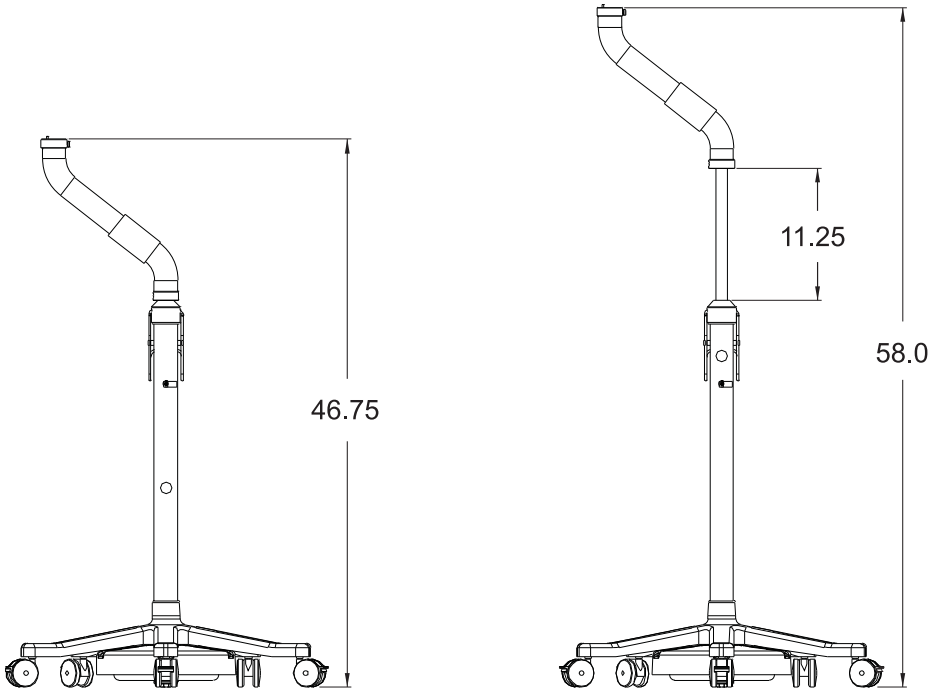

Weight: 56.0 lbs. (25.4 kg.)

*Measurements are in inches.

17.2.4 Stand Mounting Kit Components Weights and Dimension.

17.2.4.1 Display Control Unit (DCU) Bracket Weight and Dimensions

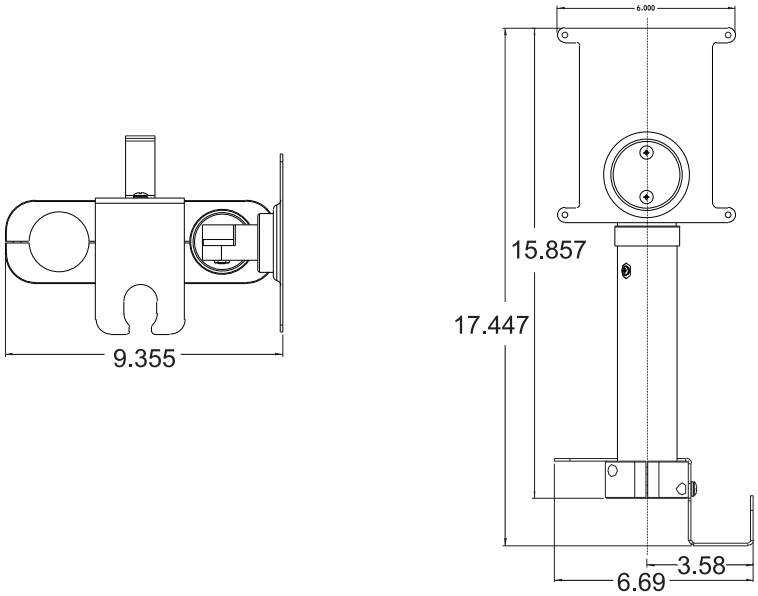

Weight: 4.0 lbs. (1.8 kg)

*Measurements are in inches. Weight does not include DCU weight.

17.2.4.2 Power Unit Bracket Weight and Dimensions

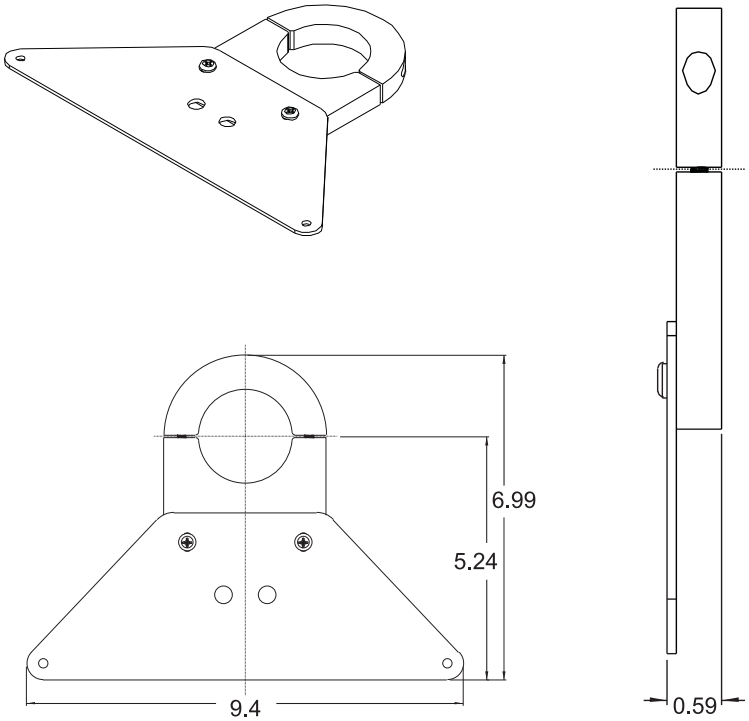

Weight: 1.2 lbs. (0.54 kg)

* Measurement are in inches. Weight does not include Power Unit weight.

17.2.5 Adjustable Table Mount (KMA 350) Weight and Dimensions

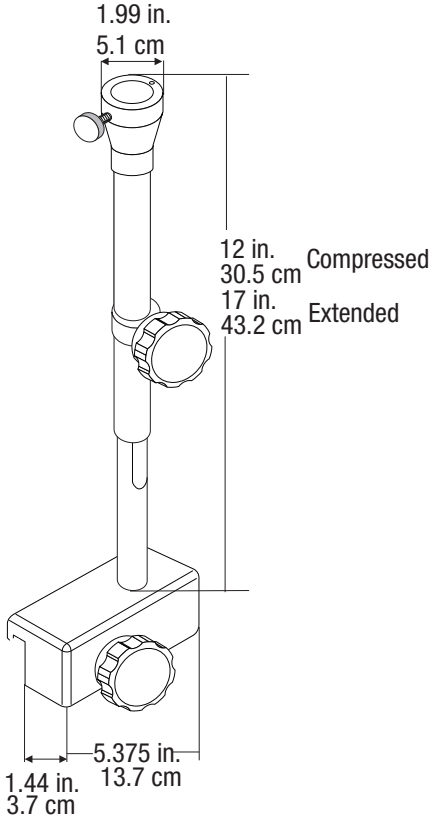

Weight*: 5.4 lbs. (2.44 kg)

*Weight does not include the Injector Head weight.

17.2.6 OCS Mount Weight and Dimensions

- "Ceiling Mount Weight and Dimensions"
- "Trolley Mount Weight and Dimensions"
- "Wall Mount Weight and Dimensions"

17.2.6.1 Ceiling Mount Weight and Dimensions

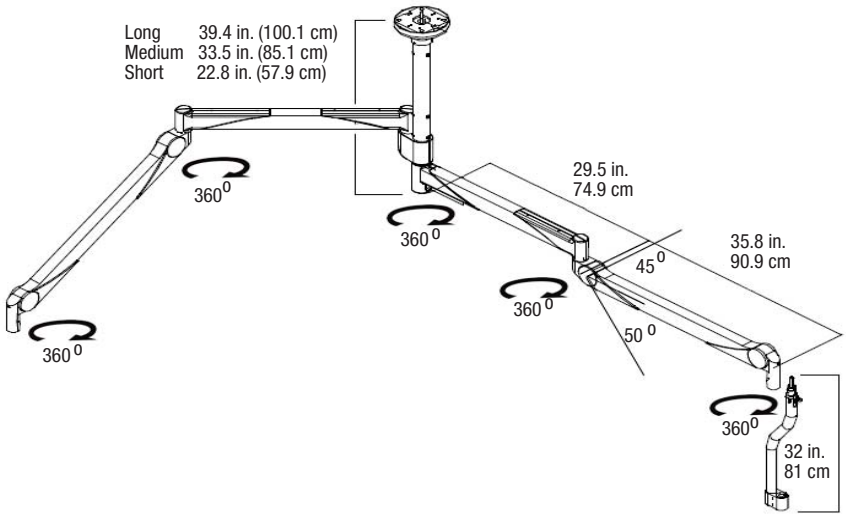

System Weight*: Short Column 89.58 lbs (40.63 kg)

Medium Column 96.18 lbs (43.63 kg)

Long Column 100.66 lbs (45.66 kg)

*Weight does not include Injector Head weight.

17.2.6.2 Trolley Mount Weight and Dimensions

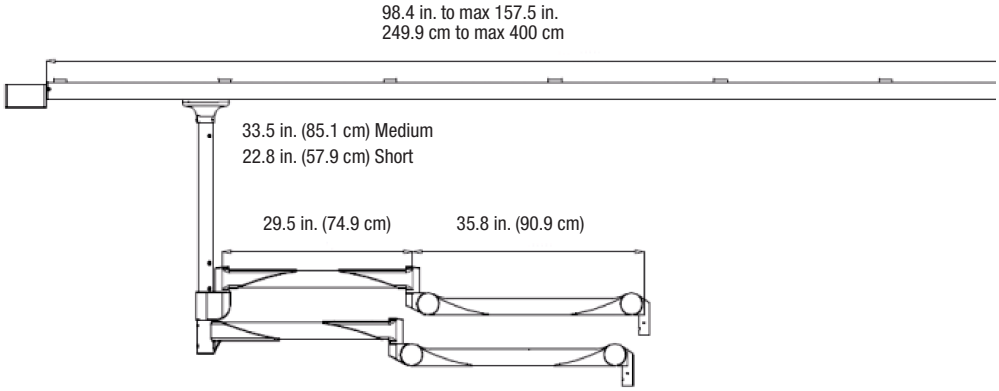

System Weight*: Short Column 76.38 lbs (34.65 kg)

Long Column 78.58 lbs (35.64 kg)

*Weight does not include Injector Head weight.

17.2.6.3 Wall Mount Weight and Dimensions

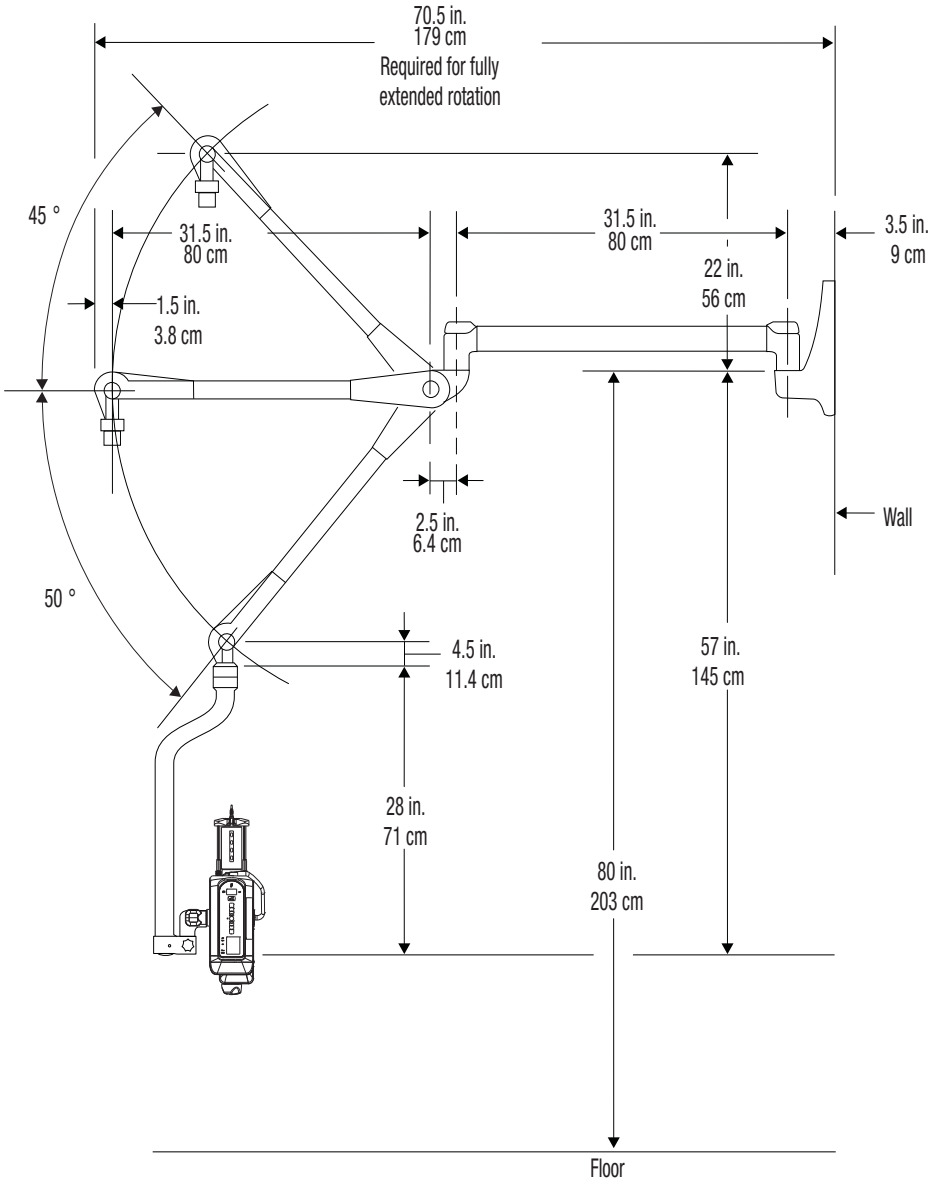

System Weight*: 43.28 lbs (19.63 kg)

* Weight does not include Injector Head weight.

17.2.7 Fixed Table Mount Weight and Dimensions

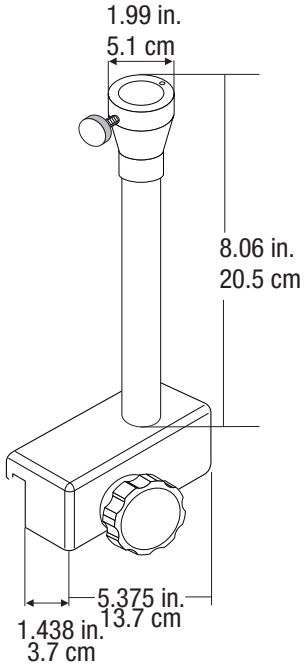

Weight*: 3.8 lbs (1.72 kg)

*Weight does not include the Display Control Unit weight.

17.2.8 Display Control Unit Desk Stand Mount Weight and Dimensions

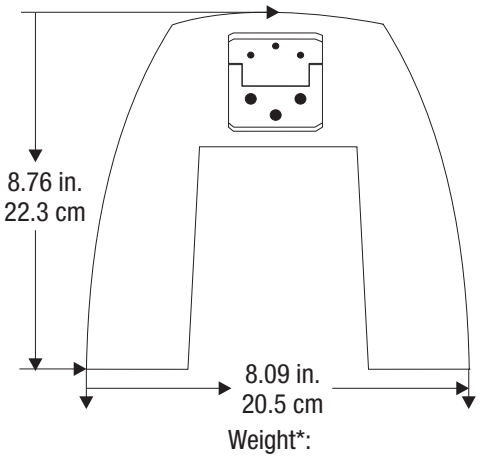

Weight*: 2.6 lbs (1.17 kg)

*Weight does not include the Display Control Unit weight.

17.2.9 Display Control Unit Wall Mount Weight and Dimensions

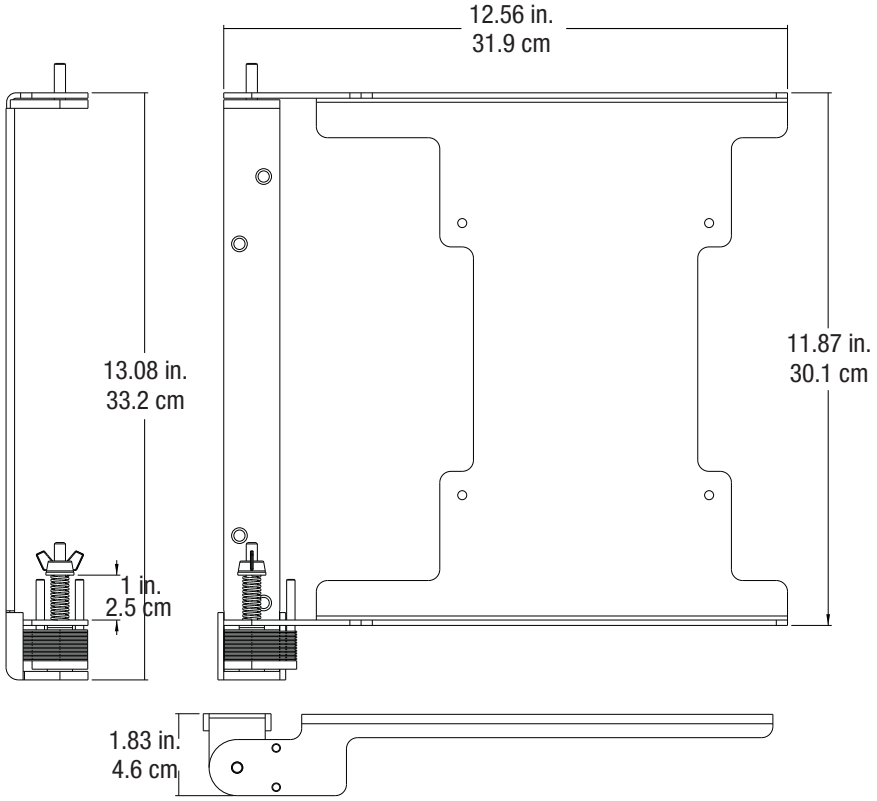

Weight*:

Weight*: 4.4 lbs (1.99 kg)

*Weight does not include the Display Control Unit weight.

17.2.10 Power Unit Floor Mount Weight and Dimensions

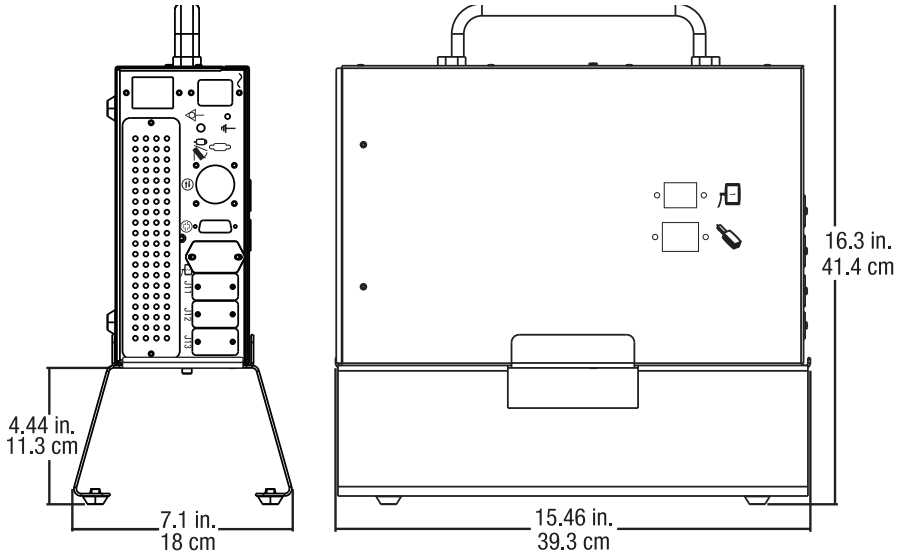

Weight*: 2.2 lbs (1 kg)

*Weight does not include the Power Unit weight.

17.3 ISI Technical Specifications

This section outlines the Mark 7 Arterion specifications for the output signals and input signals for the ISI, and shows pinouts for legacy ISI connector, universal cable, and Siemens cable.

NOTE: Systems are configured for Universal ISI operation. If configuring for Siemens system, contact local service for assistance.

17.3.1 ISI Output Specifications

The tables below list the output signals and the relay contact outputs for the Mark 7 Arterion ISI.

Table 17 - 1: Output Signals

Signal Name	Description
Extended_Arm	This signal is a pair of relay contacts output from the Injector. When active, it indicates that the Injector is in an armed state and is ready to accept the start input from the Imaging System. This signal operates as an Extended Arm; it becomes active with the arming of the Injector and remains active after an injection until the signal that initiated the injection (e.g. INJ_START signal from the Imaging System) is deactivated. **NOTE:** The Injector still disarms at the completion of the injection; only this ISI armed signal is extended.
Injecting	This signal is a pair of relay contacts output from the Injector. It indicates that the piston on the Injector is in motion.
X-Ray Trigger	This signal is a pair of relay contacts output from the Injector. When the Injector X-ray delay has expired, this signal becomes active and notifies the Imaging System to start the X-ray. Like the Extended Arm signal, the X-RAY_TRIGGER signal remains active until the signal initiating the injection (e.g. INJ_START signal from the Imaging System) is deactivated.
Inj_Hand_Switch_On	This signal is a pair of relay contacts output from the Injector. When the INJ_HAND_SWITCH_DISABLE input is active and the Injector is armed, this signal indicates when the Injector handswitch (contrast activation only) or footswitch is in an “on” position; otherwise, this signal is inactive.

Table 17 - 2: Relay Contact Outputs

2A @ 28VDC or 0.5A @ 125VAC

17.3.2 ISI Input Specifications

The Mark 7 Arterion ISI is activated by a contact closure at the imaging system, and it is powered by internal 24VDC isolated supply with short circuit protection at the Mark 7 Arterion Injector.

The tables below list the output signals and the Opto-isolated Input requirements.

Table 17 - 3: ISI Input Signals

Signal Name	Description
Inj_Start	This signal is an input to the Injector and is generated by the Imaging System. Once the Injector is armed and the EXTENDED_ARM signal is active, activating this signal enables the Injector to start. Deactivating this signal during an injection will abort any injection in progress and disarm the Injector.
Inj_Disarm	This signal is an input to the Injector and is generated by the Imaging System. This signal must be inactive to allow the Injector to be armed. When the Injector is armed or is injecting, activating this signal will disarm the Injector and abort any injection in progress.
Inj_Hand_Switch_-Disable	This signal is an input to the Injector and is generated by the Imaging System. This signal must be inactive to allow the Injector handswitch and footswitch to function normally when in ISI mode. When this signal is active, the Injector handswitch (contrast activation only) and footswitch are disabled from directly starting the Injector and the Injector can only be started from a remote INJ_START control.

Table 17 - 4: Opto-isolated Inputs Requirements

10mA at 24VDC (nominal), 15mA at 30VDC (maximum).

17.3.3 ISI Connector Specifications

The figures below show the pinouts for the Legacy ISI connector, ISI Universal cable, and ISI Siemens cable. Table 17 - 5 on page 17 - 133 provides a brief description of each pin in the Legacy ISI Connector.

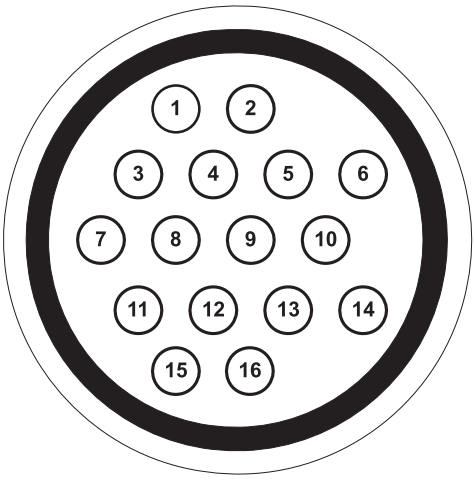

Figure 17 - 1: ISI Legacy Connector (View Into Injector Connector)

1 - Injecting N/O	**2 -** Injecting N/O
3 - Extended_Arm N/O	**4 -** Extended_Arm N/O
5 - Handswitch Disable	**6** - ISO_GND
7 - Remote Start	**8 -** Remote Disarm
9 -Remote Start	**10 -** X-Ray Trigger N/O
11 - X-Ray Trigger N/O	**12 -** Gate Out (unused)
13 - Gate Out (unused)	**14 -** Handswitch On N/O
15 - Handswitch On N/O	**16 -** AC Ground - cable shield

Table 17 - 5: ISI Legacy Connector Signals

Signal	Description
Injecting	Output signal to Imaging System that shorts pins 1 and 2 together when the system is injecting. When not injecting, pins 1 and 2 are open.
Extended_Arm	Output signal to Imaging System that shorts pins 3 and 4 together when the system is armed. When not armed, pins 3 to 4 are open.
Handswitch Disable	Input signal from Imaging System; when pins 5 and 6 are shorted, the injector handswitch and/or footswitch is disabled from directly initiating an injection. When open, the injector handswitch and/or footswitch functions normally.
Remote Start	Input signal from Imaging System; when pins 7 and 9 are shorted, the injector is commanded to start the injection.
Remote Disarm	Input signal from Imaging System; when pins 8 and 6 are shorted, the injector is commanded to disarm.
X-Ray Trigger	Output signal to Imaging System that shorts pins 10 and 11 together when active.
Gate Out	Output signal to Imaging System that shorts pins 12 and 13 together based on an ECG R-wave signal. This signal will not be used in the Mark 7 Arterion design and is only presented for informational purposes.
Handswitch closed	Output signal to Imaging System that shorts pins 14 and 15 together as an indication that the Mark 7 Arterion handswitch or footswitch is pressed.

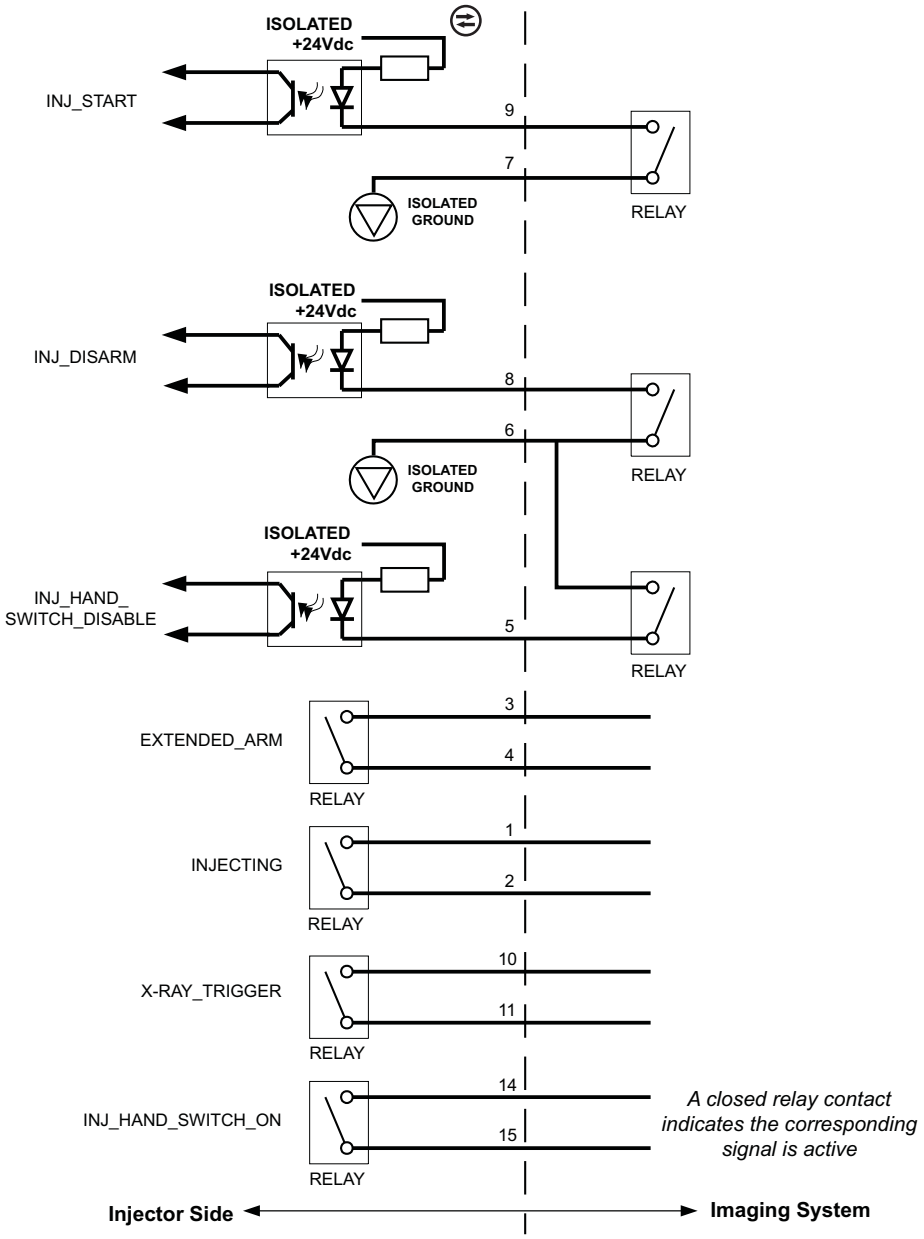

Figure 17 - 2: ISI Universal Cable

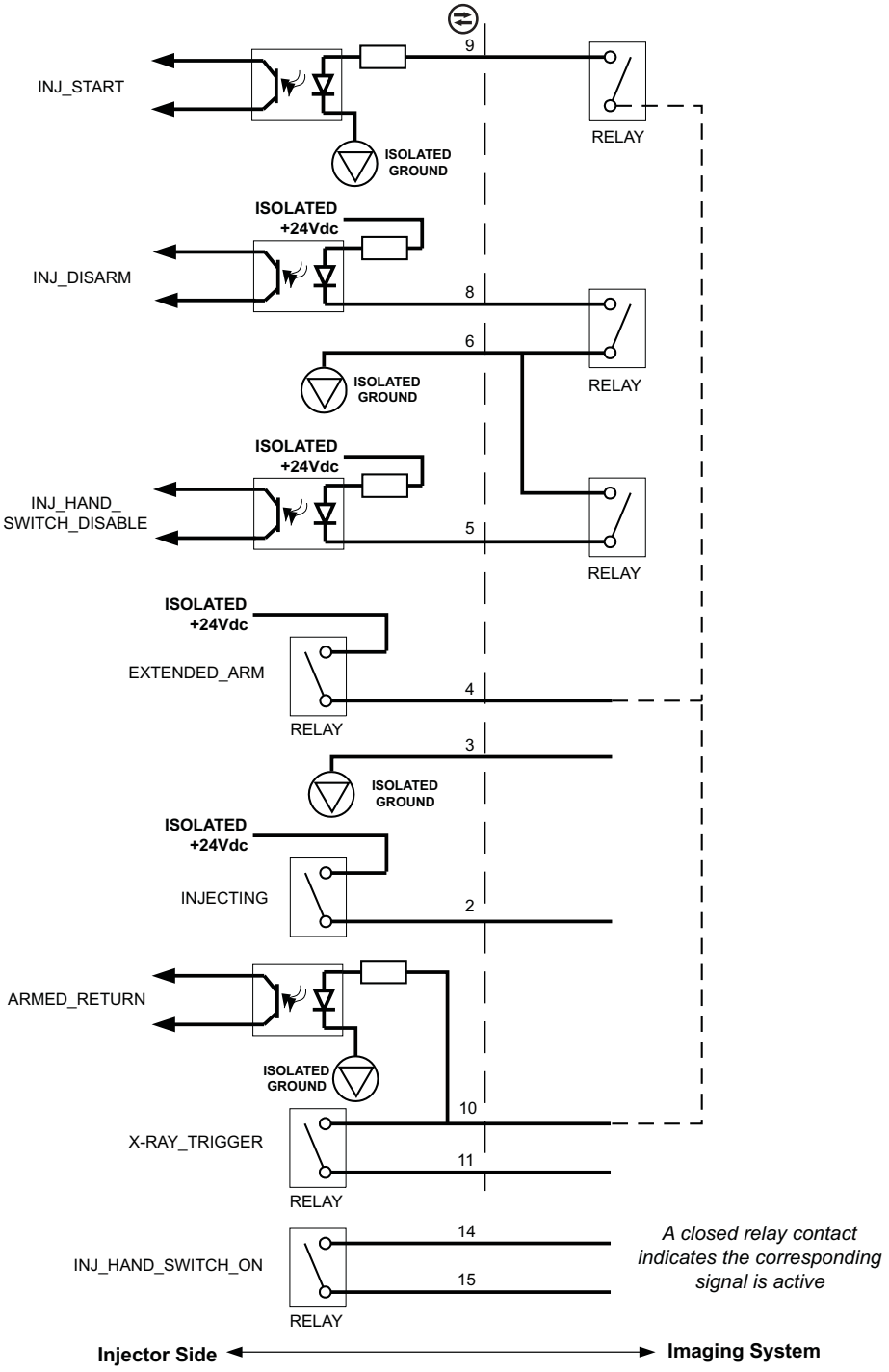

Figure 17 - 3: ISI Siemens

17.4 Environmental Specifications

17.4.1 Operating

The system may not meet all performance specifications if operated outside the following conditions.

Temperature:	+15ºC to +30º C (+59ºF to +86ºF)
Humidity:	20% to 75% R.H.
Air Pressure:	70 kPa to 106 kPa after it has stabilized to within the operating pressure ranges.

17.4.2 Non-Operating: (Transportation and Storage)

Temperature:	-20ºC to 60ºC (-4ºF to +140ºF)
Humidity:	5% to 100% R.H.
Air Pressure:	57 kPa to 106 kPa after it has stabilized to ambient conditions.

17.4.3 EMI/RFI

The injector system is classified as Group 1, Class A equipment per the RF emission requirements of EN 60601-1-2. Accessories provided by Bayer will also comply with this standard.

17.4.4 Equipment Classification

Type of protection against electrical shock: Class 1.

Degree of protection against electrical shock: Type CF Defibrillation-proof applied part.

Degree of protection against ingress of water: IPX1.

Degree of safety of application in the presence of a flammable anaesthetic mixture with air or with oxygen or nitrous oxide: Equipment is not suitable for use in the presence of a flammable anaesthetic mixture with air or with oxygen or with nitrous oxide.

Mode of operation: Continuous.

17.4.5 Class I Product

A product that is provided with a reliable protective earth (PE) such that all accessible metal parts cannot become live in the event of a failure of basic insulation and therefore will provide protection against electric shock in the case of failure of basic insulation.

17.4.6 Type CF Defibrillation-proof Applied Part

The Injection System is Type CF Defibrillation-proof as the System may be utilized in a situation when the applied part is connected to the patient while defibrillation is applied. During the discharge of a cardiac defibrillator to a patient connected to the Defibrillation-proof applied part, hazardous energies do not appear on the enclosures, signal input and output parts.

17.4.7 IPX1

IEC 60529 classification of degree of protection (IP Code) provided by enclosures of electrical equipment against ingress of vertically dripping water with harmful effects.

17.4.8 Continuous Mode of Operation

Operation under normal load for an unlimited period, without the specified limits of temperature being exceeded.

17.4.9 EU Directive

The MEDRAD® Mark 7 Arterion Injection System complies with the essential requirements of the Medical Device Directive 93/42/EEC and bears the CE Mark to show conformity with the provisions of this Directive.

17.5 Power Cable Specifications

The specifications required by the Mark 7 Arterion Injection System relative to the power cable (plug, receptacle, and cord) are:

- Operating Temperature: 60° C minimum
- Receptacle Type: IEC-60320 C13
- Normal Cord Voltage: 300 VAC minimum
- Wire Gauge: 1.00 mm^2 minimum
- Cord Type: IEC 60245-1, Annex A, Designation 53, or IEC 60227-1, Annex A, Designation 53 Certified
- Cord Length: 3 m maximum

The power cable must meet applicable plug, cord, and receptacle specifications including type, voltage, current, and safety approval markings for the country in which the power cable is being used.

17.6 Mark 7 Arterion Injection System to IT Network Connections

Connecting the system to an IT-Network that includes other equipment could result in unidentified risks to patients, operators, or third parties.

The organization responsible for managing the network should identify, analyze, evaluate, and control risks associated with connecting the equipment to the IT-Network.

Subsequent changes to the IT-Network could introduce new risks and require additional analysis. For example:

- Changes in the IT-network configuration
- Connecting additional items to the IT-Network
- Disconnecting items from the IT-Network
- Updating equipment connected to the IT-Network
- Upgrading equipment connected to the IT-Network

18 Options and Accessories

The sections below list catalog numbers for:

- "Mark 7 Arterion System Mount Options"
- "Mark 7 Arterion Accessory Devices and Kits"
- "Mark 7 Arterion Cords and Cables"
- "OCS Mounting Systems"
- "OEM Imaging System Interface Cables"

18.1 Mark 7 Arterion Disposables/Syringe Kits

Description	Catalog Number
Disposable Syringe with Quick Fill Tube	ART 700 SYR
Display Control Unit Sheath	AVA 500 DCOV

18.2 Mark 7 Arterion System Mount Options

18.2.1 Injector Head Mount Options

Description	Catalog Number
Mark 7 Arterion Pedestal	ART 700 PED A
Adjustable Table Mount	KMA 350
Free Standing Stand on Wheels	KMA 320RT
Adjustable Height Stand	KMA 330

18.2.2 Power Unit Mount Options

Description	Catalog Number
Mark 7 Arterion Pedestal	ART 700 PED A
Floor Mount	ART 700 F PSU

18.2.3 Display Control Unit Mount Options

Description	Catalog Number
Mark 7 Arterion Pedestal	ART 700 PED
Adjustable Table Mount Kit (includes adjustable table mount and display mount fulcrum)	ART 700 DCU TM A
Fixed Table Mount Kit (includes fixed table mount and display mount fulcrum)	ART 700 DCU TM
Display Mount Fulcrum	ART 700 DCU FMK
Desk Stand Kit	ART 700 DCU DM
Wall Mount	ART 700 DCU WM

18.2.4 Cable Brackets

Description	Catalog Number
Floor Cable Bracket	ART 700 CB F
Table Cable Bracket	ART 700 CB T

18.3 Mark 7 Arterion Accessory Devices and Kits

18.3.1 Switches

Description	Catalog Number
Footswitch 25 ft. (7 m) (Optional)	ART 700 FS
Handswitch 6 ft. (1.8 m) (Standard)	ART 700 HS6
Handswitch 12 ft. (3.7 m) (Optional)	ART 700 HS12
Handswitch Mount Kit	ART 700 HSM
VFlow Hand Controller	VF HC

18.3.2 Accessory Devices and Kits

Description	Catalog Number
Syringe Heat Maintainer	ART 700 HM
Dual Display Option (Does not include mounting)	ART 700 2DCU
Pressure Jacket	AVA 500 PJ150

18.4 Mark 7 Arterion Cords and Cables

18.4.1 Power Cords

Description	Catalog Number
Power Cord - North America and Japan - Standard Length	AVA 500 PC110V
Power Cord - North America and Japan - 20 ft. (6 m)	AVA 500 PP
Power Cord - International	AVA 500 PC220V
Power Cord - China	AVA 500 PCCHINA
Power Cord - Brazil	AVA 500 PCBRAZIL
Power Cord - Philips Cabinet - 20 ft. (6m)	ART 700 UMNL
Power Cord - United Kingdom/Saudi Arabia	84575445

18.4.2 Head Power and Communication Extension Cables

Description	Catalog Number
Cable Head Power - 15 ft. (4.5 m)	ART 700 HC 15
Cable Head Power - 40 ft. (12. m)	ART 700 HC 40
Cable Head Power - 65 ft. (20 m)	ART 700 HC 65
Cable Head Power - 90 ft. (27 m)	ART 700 HC 90

18.4.3 Display Cables

Description	Catalog Number
Cable Display - 10 ft. (3 m)	ART 700 DC 10
Cable Display - 25 ft. (7.5 m)	ART 700 DC 25
Cable Display - 50 ft. (15 m)	ART 700 DC 50
Cable Display - 75 ft. (23 m)	ART 700 DC 75
Cable Display - 100 ft. (30.5 m)	ART 700 DC 100
Display Extension Cable - 90 ft. (27.4m)	ART 700 DC 90

18.5 OCS Mounting Systems

18.5.1 Stationary Ceiling Mount

Description	Catalog Number
Portegra - Stationary Ceiling Mount - 22.8 in. (58 cm) Post	OCS CEIL 58-P
Portegra - Stationary Ceiling Mount - 33.5 in. (85 cm) Post	OCS CEIL 85-P
Portegra - Stationary Ceiling Mount - 39.4 in. (100 cm) Post	OCS CEIL 100-P

18.5.2 Mobile Ceiling Mount

Description	Catalog Number
Portegra 2 - Track Ceiling Mount - 22.8 in. (58 cm) Post	OCS TRACK 58-P
Portegra 2 Track Ceiling Mount - 33.5 in, (85 cm) Post	OCS TRACK 85-P

18.5.3 Wall Mount

Description	Catalog Number
Portegra 2 - Wall mount - 33.5 in. (85 cm) Post	OCS WALL-P

18.5.4 Ceiling Mount Plate

Description	Catalog Number
Portegra 2 - Ceiling Mount Plate	OCA PLATE CEIL

18.6 OEM Imaging System Interface Cables

18.6.1 General Electric

Description	Catalog Number
GE Advantx, 15 ft. (4.5 m)-ISI Signals Only	XMC 915R
GE Innova, 15 ft. (4.5 m)-ISI Signals Only	XMC 915R
GE Advantx, 20 ft. (6 m) Remote Power Unit, ISI Signals Only	XMC 917A
GE Innova, 20 ft. (6 m) Remote Power Unit, ISI Signals Only	XMC 917A
GE/OEC 25 ft. (8 m) - ISI Signals Only	XMC 990R

18.6.2 Philips

Description	Catalog Number
MultiDiagnost (MD) and Integris, 15 ft. (4.5 m)-ISI, Equipotential	XMC 925A
Integris (Including Integris Allura), 15 ft. (4.5 m) ISI, Equipotential	XMC 925A
XPER, 15 ft. (4.5 m)-ISI, Power, Equipotential	XMC 927A
XPER, 26 ft. (8m)-ISI, Power, Equipotential	XMC 928-A
MultiDiagnost (MD) and Integris, 40 ft. (12.2)-ISI SIgnals Only, Remote Power Unit	XMC 945 40
XPER, 80 ft. (24 m) ISI Signals, Remote Power Unit	XMC 947R

18.6.3 Siemens

Description	Catalog Number
Axiom Artis, 16.5 ft. (5 m)-ISI, Power, Equipotential	XMC 977A
Multistar/Angiostar, 13 ft. (4 m)-ISI, Power, Equipotential	XMC 970A with 3016360

18.6.4 Ziehm

Description	Catalog Number
Vision 26 ft. (8m) ISI Signals Only	XMC 951 AI

18.6.5 Universal Imaging System Interface Cables

Description	Catalog Number
Universal Synchronization Cable, 25 ft. (8 m)	XMC 906I
Universal Synchronization Cable, 50 ft. (15 m)	XMC 906 50I
Universal Synchronization Cable, 75 ft. (23 m)	XMC 906 75I
Universal Synchronization Cable, 100 ft. (31 m)	XMC 906 100I

18.6.6 Equipotential Cables

Description	Catalog Number
Equipotential Cable, 16.4 ft. (5 m)	78101-15-AC-26
Equipotential Cable, 19.7 ft. (6 m)	GE EP TABL

19 Compliance to IEC 60601-1-2 / 2nd, 3rd, and 4th Editions

The MEDRAD® Mark 7 Arterion Injection System, complies with the requirements of:

IEC 60601-1-2: Medical electrical equipment – Part 1-2: General requirements for basic safety and essential performance – Collateral standard: Electromagnetic compatibility – Requirements and tests

CISPR 11: Industrial, scientific and medical (ISM) radio-frequency equipment- Electromagnetic disturbance characteristics – Limits and methods of measurement

IEC 61000-3-2: Electromagnetic compatibility (EMC) – Part 3-2: Limits – Limits for harmonic current emissions (equipment input current ≤ 16 A per phase) (This does not apply to Class A equipment.)

IEC 61000-3-3: Electromagnetic compatibility (EMC)- Part 3-3: Limits - Limitation of voltage changes, voltage fluctuations and flicker in public low-voltage supply systems, for equipment with rated current ≤ 16 A per phase and not subject to conditional connections) (This does not apply to Class A equipment.)

IEC 61000-4-2: Electromagnetic compatibility (EMC) – Part 4-2: Testing and measurement techniques – Electrostatic discharge immunity test

IEC 61000-4-3: Electromagnetic compatibility (EMC) – Part 4-3: Testing and measurement techniques – Radiated, radio-frequency, electromagnetic field immunity test

IEC 61000-4-4: Electromagnetic compatibility (EMC) – Part 4-4: Testing and measurement techniques – Electrical fast transient/burst immunity test

IEC 61000-4-5: Electromagnetic compatibility (EMC) – Part 4-5: Testing and measurement techniques – Surge immunity test

IEC 61000-4-6: Electromagnetic compatibility (EMC) – Part 4-6: Testing and measurement techniques – Immunity to conducted disturbances, induced by radio frequency fields

IEC 61000-4-8: Electromagnetic compatibility (EMC) – Part 4-8: Testing and measurement techniques – Power frequency magnetic field immunity tests

IEC 61000-4-11: Electromagnetic compatibility (EMC) – Part 4-11: Testing and measurement techniques – Voltage dips, short interruptions and voltage variations immunity tests

This system is in compliance to IEC-60601-1-2 / 2nd, 3rd, and 4th edition Standards. Special precautions regarding Electromagnetic Compatibility (EMC), are required for installation and use of this system. Detailed EMC information contained in this addendum is intended to reflect conformance to IEC-60601-1-2 / 2nd, 3rd, and 4th edition standards.

⚠WARNING
For proper operation, use only accessories and options provided by Bayer that are designed specifically for the system. Other non-Bayer approved accessories or options may cause equipment damage or may result in increased emissions or decreased immunity of the system. System accessories listed in the operation manual comply with the requirements of electromagnetic emissions and immunity standards IEC-60601-1-2 / 2nd, 3rd, and 4th edition.
Do not use system adjacent to or stacked with other equipment. Use of this equipment adjacent to or stacked with other equipment should be avoided because it could result in improper operation. If adjacent or stacked use is necessary, the system and the other equipment should be observed to verify normal operation in the configuration in which it will be used.
Portable RF communications equipment (including peripherals such as antenna cables and external antennas) should be used no closer than 30 cm (12 inches) to any part of the injector system unless a greater separation distance is required as indicated by the equation. Otherwise, degradation of the performance of this equipment could result.

⚠CAUTION
System may disarm or fail to operate when exposed to high magnetic fields. Portable and mobile RF communications equipment can affect the system.

Recommended separation distances between portable and mobile RF communications equipment and the system			
The System is intended for use in an electromagnetic environment in which radiated RF disturbances are controlled. The customer or the user of the system can help prevent electromagnetic interference by maintaining a minimum distance between portable and mobile RF communications equipment (transmitters) and the system as recommended below, according to the maximum output power of the communications equipment.			
Rated maximum output power of transmitter (W)	Separation distance according to frequency of transmitter (m)		
	150 KHz to 80 MHz $d = [3.5/V_1] \sqrt{p}$	80 MHz to 800 MHz $d = [3.5/E_1] \sqrt{p}$	800 MHz to 2.7 GHz $d = [7/E_1] \sqrt{p}$
0.01	0.12	0.12	0.23
0.1	0.37	0.37	0.74
1	1.17	1.17	2.33
10	3.69	3.69	7.38
100	11.67	11.67	23.33
For transmitters rated at a maximum output power not listed above, the recommended separation distance ***d*** in meters (m) can be estimated using the equation applicable to the frequency of the transmitter, where ***p*** is the maximum output power rating of the transmitter in watts (W) according to the transmitter manufacturer. **NOTE 1:** At 80 MHz and 800 MHz, the separation distance for the higher frequency applies. **NOTE 2**: These guidelines may not apply in all situations. Electromagnetic propagation is affected by absorption and reflection from structures, objects and people.			

THE SYSTEM REQUIRES SPECIAL PRECAUTIONS REGARDING EMC. Install and put into service according to the EMC information provided below:

Guidance and manufacturer's declaration - electromagnetic emissions		
The system is intended for use in the electromagnetic environment specified below. The customer or user of the system should assure that it is used in such an environment.		
Emissions test	**Compliance**	**Electromagnetic environment - guidance**
RF emissions CISPR 11	Group 1	The System uses RF energy only for its internal function. Therefore, its RF emissions are very low and are not likely to cause any interference in nearby electronic equipment.
RF emissions CISPR 11	Class A	The emission characteristics of this system make it suitable for use in industrial areas and hospitals (CISPR 11 Class A). If the system is used in a residential environment (for which CISPR 11 Class B is normally required), this equipment might not offer adequate protection to radio-frequency communication services. The user might need to take mitigation measures, such as relocating or reorienting the equipment.
Harmonic emissions IEC 61000-3-2	Not applicable	
Voltage fluctuations / flicker emissions IEC 61000-3-3	Not applicable	

Guidance and manufacturer's declaration - electromagnetic immunity		
The system is intended for use in the electromagnetic environment specified below. The customer or user of the system should assure that it is used in such an environment.		
Immunity test	**IEC 60601 Test Compliance Level**	**Electromagnetic environment - guidance**
Electrostatic discharge (ESD) IEC 61000-4-2	±8 kV contact ±2, ±4, ±8, ±15 kV air	Floors should be wood, concrete or ceramic tile. If floors are covered with a synthetic material, the relative humidity should be at least 30%.
Electrical fast transient/ burst IEC 61000-4-4	±2 kV for a.c. mains ±1 kV for I/O ports	Mains power quality should be that of a typical commercial or hospital environment.
Surge IEC 61000-4-5	± -0.5 kV, ± -1 kV, ± -2 kV line to ground ± -0.5 kV, ± -1 kV line to line	Mains power quality should be that of a typical commercial or hospital environment.
Voltage dips IEC 61000-4-11	100% Vac for 0.5 cycles at 0°, 45°, 90°,135°,180°, 225°, 270°, 315	Mains power quality should be that of a typical commercial or hospital environment. If the user of the system requires continuous operation during power mains interruptions, it is recommended the system be powered from an uninterruptible power supply or battery.
	100% Vac for 1.0 cycles at 0°	
	30% Vac for 30 cycles at 0°	
	100% Vac for 250 (50Hz) cycles or 300 (60Hz) cycles at 0°	
Voltage interruptions IEC 61000-4-11	0% a.c. 250(50 Hz) or 300(60 Hz) at 0°	
Power frequency (50/60 Hz) magnetic field IEC 61000-4-8	30 A/m	Power frequency magnetic fields should be at levels characteristic of a typical location in a typical commercial or hospital environment.

Guidance and manufacturer's declaration - electromagnetic immunity

The system is intended for use in the electromagnetic environment specified below. The customer or user of the system should assure that it is used in such an environment.

Immunity test	IEC 60601 Test Compliance Level	Electromagnetic environment - guidance
Conducted RF IEC 61000-4-6	3Vrms from 150kHz to 80 MHz at 80% AM 1kHz 6Vrm, 80% AM 1kHz at ISM frequencies listed below:	**WARNING:** Portable RF communications equipment (including peripherals such as antenna cables and external antennas) should be used no closer than 30 cm (12 inches) to any part of the injector system unless a greater separation distance is required as indicated by the equation. Otherwise, degradation of the performance of this equipment could result. Recommended separation distance $d = 1.17 \sqrt{p}$
Radiated RF IEC 61000-4-3	3Vrms from 80 MHz to 2.7 GHz at 80% AM 1kHz and specific ISM bands listed below:	$d = 1.17 \sqrt{p}$ 80 MHz to 800 MHz $d = 2.33 \sqrt{p}$ 800 MHz to 2.7 GHz Where ***p*** is the maximum output power rating of the transmitter in watts (W) according to the transmitter manufacturer and d is the recommended separation distance in meters (m). Field strengths from fixed RF transmitters, as determined by an electromagnetic site survey, [a] should be less than the compliance level in each frequency range.[b] Interference may occur in the vicinity of equipment marked with the following symbol: Non-ionizing Radiation Symbol (IEC TR 60878, 5140)

Frequency (MHz-ISM List)	Test Level (Vrms)
1.8 - 2.0	6
3.5 - 4.0	6
5.3 - 5.4	6
6.765 - 6.795	6
7.0 - 7.3	6
10.1- 10.15	6
13.553 - 13.567	6
14.0 - 14.2	6
18.07 - 18.17	6
21.0 - 21.4	6
24.89 - 24.99	6
26.957 - 27.283	6
28.0 - 29.7	6
40.66 - 40.70	6
50.0 - 54.0	6

Frequency (MHz)	Modulation Type	Modulation Frequency	Field Strength (Volts/meter)
385	Pulse	18 Hz	27
450	Pulse	18 Hz	28
710	Pulse	217 Hz	9
745	Pulse	217 Hz	9
780	Pulse	217 Hz	9
810	Pulse	18 Hz	28
870	Pulse	18 Hz	28
930	Pulse	18 Hz	28
1720	Pulse	217 Hz	28
1845	Pulse	217 Hz	28
1970	Pulse	217 Hz	28
2450	Pulse	217 Hz	28
5240	Pulse	217 Hz	9
5500	Pulse	217 Hz	9
5785	Pulse	217 Hz	9

NOTE 1 At 80 MHz and 800 MHz, the higher frequency range applies.
NOTE 2 These guidelines may not apply in all situations. Electromagnetic propagation is affected by absorption and reflection from structures, objects and people.

a. Field strengths from fixed transmitters, such as base stations for radio (cellular/cordless) telephones and land mobile radios, amateur radio, AM and FM radio broadcast cannot be predicted theoretically with accuracy. To assess the electromagnetic environment due to fixed RF transmitters, an electromagnetic site survey should be considered. If the measured field strength in the location in which the system is used exceeds the applicable RF compliance level above, the system should be observed to verify normal operation. If abnormal performance is observed, additional measures may be necessary, such as reorienting or relocating the system.
b. Over the frequency range 150 kHz to 80 MHz, field strengths should be less than 3 V/m.

Appendix - A Cable Bracket Installation Templates

TABLE MOUNT
CABLE BRACKET
HOLE TEMPLATE

NOTE TEMPLATE MAY NOT BE TO SCALE.
ALWAYS MEASURE BEFORE DRILLING.

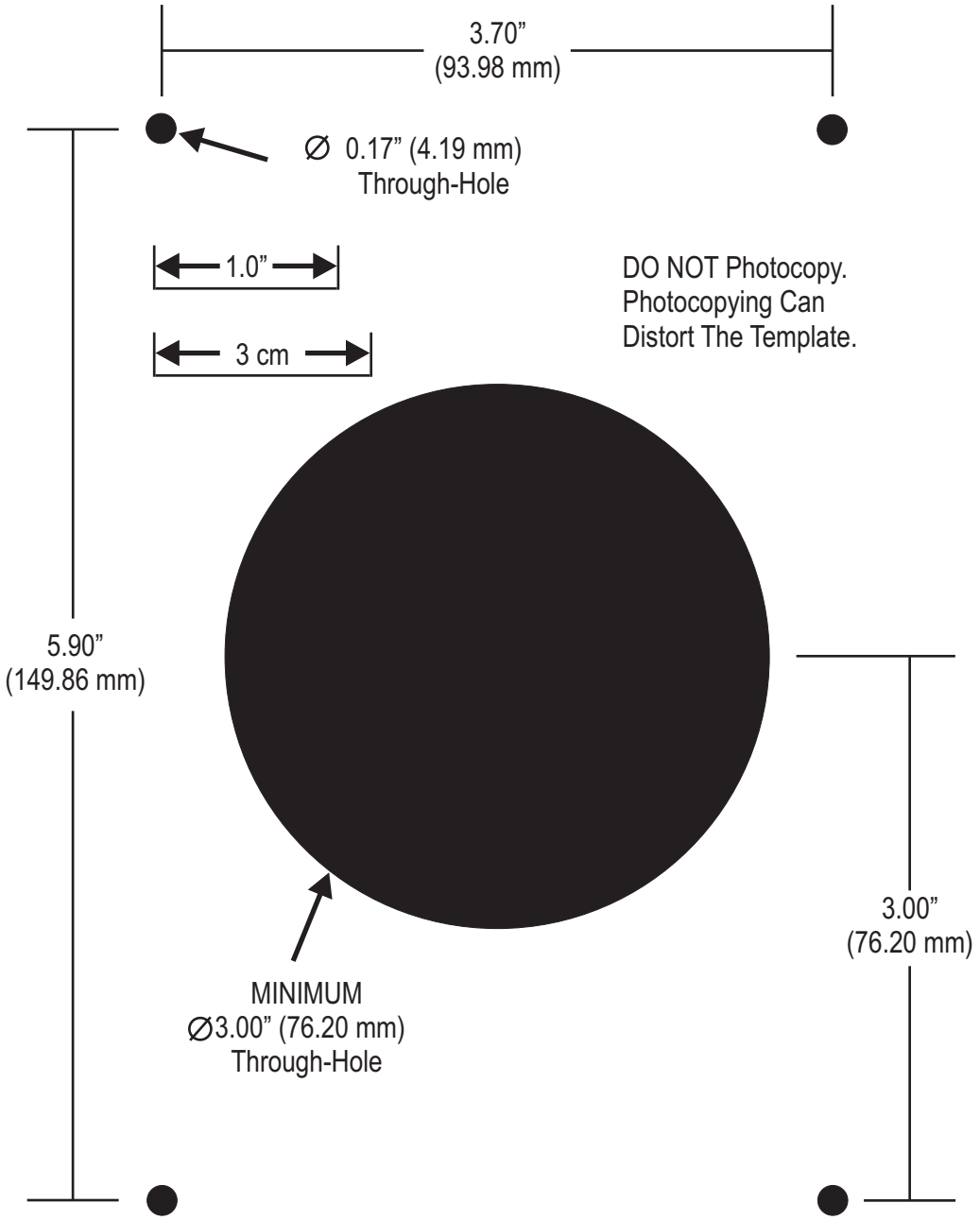

TABLE MOUNT
CABLE INSERT
HOLE TEMPLATE

NOTE TEMPLATE MAY NOT BE TO SCALE.
ALWAYS MEASURE BEFORE DRILLING.

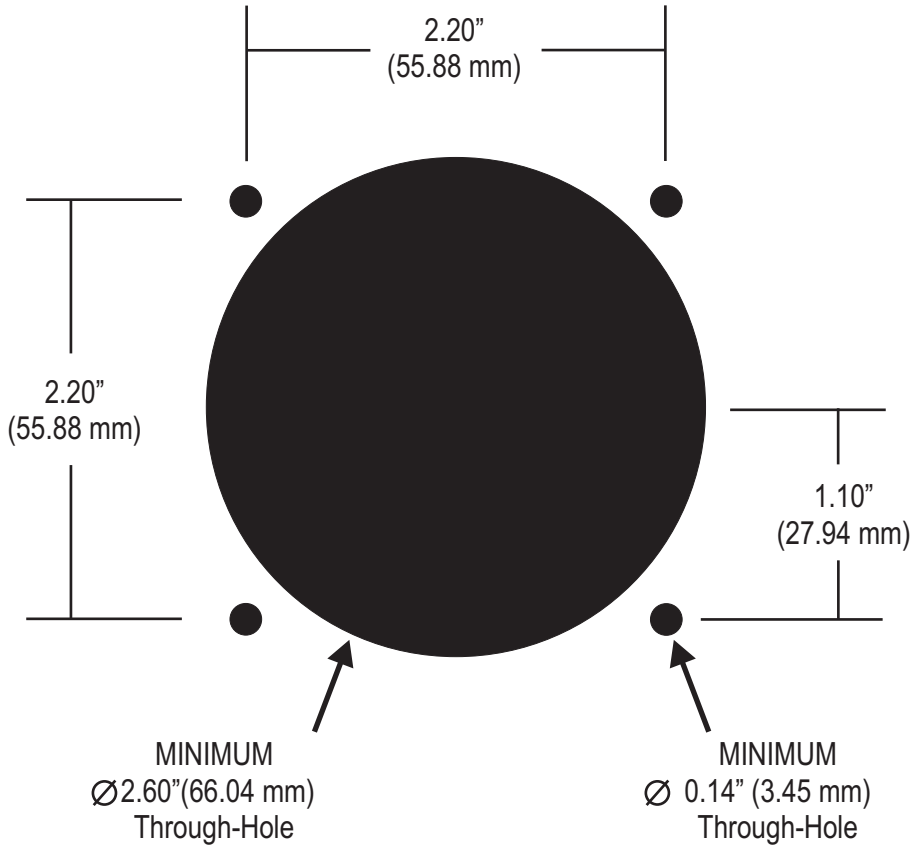

DO NOT Photocopy.
Photocopying Can
Distort The Template.

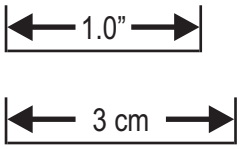

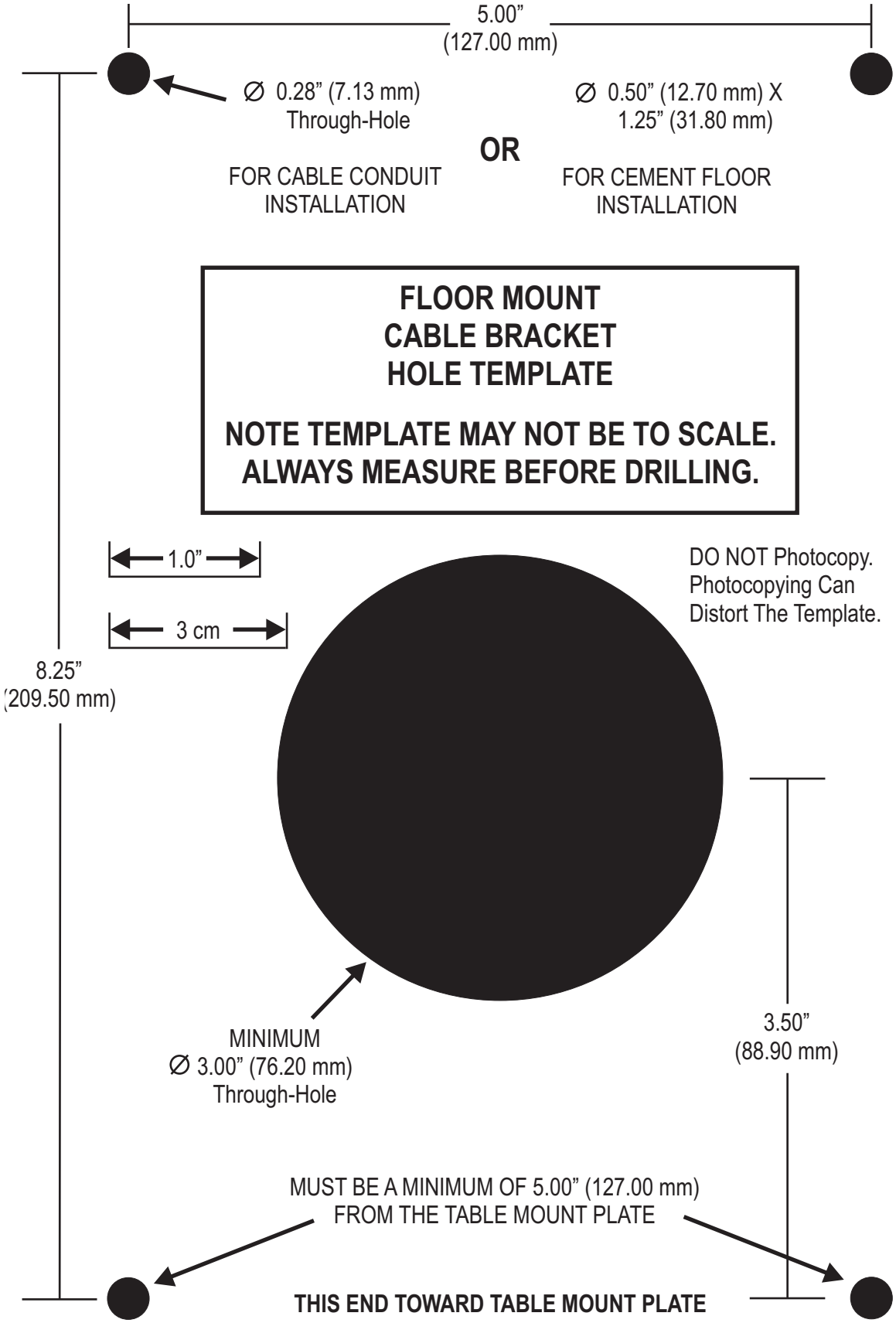
5.00”
(127.00 mm)
∅ 0.28” (7.13 mm)
Through-Hole
FOR CABLE CONDUIT
INSTALLATION
OR
∅ 0.50” (12.70 mm) X
1.25” (31.80 mm)
FOR CEMENT FLOOR
INSTALLATION
FLOOR MOUNT
CABLE BRACKET
HOLE TEMPLATE
NOTE TEMPLATE MAY NOT BE TO SCALE.
ALWAYS MEASURE BEFORE DRILLING.
1.0”
3 cm
DO NOT Photocopy.
Photocopying Can
Distort The Template.
8.25”
(209.50 mm)
MINIMUM
∅ 3.00” (76.20 mm)
Through-Hole
3.50”
(88.90 mm)
MUST BE A MINIMUM OF 5.00” (127.00 mm)
FROM THE TABLE MOUNT PLATE
THIS END TOWARD TABLE MOUNT PLATE

A
Actuals window **23, 24**
adjustable table mount
    weight and dimensions **124**
Arm Multi **58**
    prerequisites **58**
Arm Single **56**
armed light **27, 31**
arming
    Arm Multi **58**
    Arm Single
        prerequisites **56**
    prerequisites **55, 57, 58**
auto retract **29**
Auto-Fill button **30, 31**
C
cable bracket
    floor **106**
    installation **103**
    table **103**
catheter
    connect **51**
cleaning
    daily **77**
    Display Control Unit **81**
    Injector Head **77**
    monthly **81**
    Pedestal **81**
    piston **77**
    Power Unit **81**
    Pressure Jacket **77**
    Syringe Heat Maintainer **81**
    syringe interface **77**
    Table Bracket **77, 81**
D
desk stand **94**
    weight and dimensions **129**
Display Control Unit **16**
    calibration **26**
    cleaning **81**
    desk stand **94**
    fixed table mount **95**
    fulcrum mount kit **93**
    Help tab **25**
    History tab **24**
    Home tab **23**
    inspection **80**
    installation **93**
    mounting options **93, 140**
    Options tab **24**
    sterile sheath **16**
    sterile sheath installation **102**
    wall mount **97**
    weight and dimensions **122**
disposables
    remove **67**
    specifications **15**
drop front **27**
E
Enable button **30, 31**
Enable indicator **30**
End Case button **24, 67**
Environmental specifications
    Class I Product **136**
    Continuous Mode of Operation **137**
    EMI/RFI **136**
    Equipment classification **136**
    EU Directive **137**
    IPX1 **136**
    non-operating **136**
    operating **136**
    Type CF Defibrillation-proof Applied Part **136**
F
fill
    syringe **47**
Fill Strip **30, 31**
Fixed table mount
    weight and dimensions **129**
fixed table mount **95**
floor cable bracket **106**
flow rate **30**
FluiDots indicators **48**
foot switch **17**
    installation **100**
fulcrum mount kit **93**
H
hand switch **17**
    installation **100**
    mount **101**
head stand
    weight and dimensions **124**
Help tab **25**

high pressure connector tubing
installation **48, 49**
purge **49**
specifications **15**
History tab **24**
Home tab **23**
I
Imaging System Interface **17**
Imaging System initiates protocol **61**
Imaging System initiates protocol (Philips Imaging Systems Only) **62**
Injection system initiates injection **61**
input specifications **132**
output specifications **131**
Inject position **28**
injection
complete **63**
initiate **59**
initiate phased **60**
initiate single ml/m **59**
initiate single ml/s (Arm Multi) **59**
initiate single ml/s (Arm Single) **59**
perform with Imaging System Interface **60**
injector
unpack **85**
Injector Head
armed light **27, 31**
cleaning **77**
controls **27**
displays **27, 30**
drop front **27**
handle **27**
head stand installation **93**
inspection **79**
manual knob **27, 32**
mounting options **93**
OCS **93**
Pressure Jacket **27**
weight and dimensions **122**
Injector Head displays **30, 31**
Injector Head Orientation
Inject position **28**
Intermediate position **28**
Purge position **28**
syringe interface **28**
injector storage **68**
inspection
Display Control Unit **80**
Injector Head **79**
Pedestal **81**
Power Unit **81**
Air Filter **81**
Pressure Jacket **79**
Table Mount **81**
installation
cable bracket **103**
desk stand (Display Control Unit) **94**
Display Control Unit **93**
fixed table mount (Display Control Unit) **95**
floor cable bracket **106**
floor mount bracket (Power Unit) **91**
foot switch **100**
fulcrum mount kit (Display Control Unit) **93**
hand switch **100**
head stand (Injector Head) **93**
high pressure connector tubing **48, 49**
Injector Head **93**
OCS (Injector Head) **93**
Pedestal **86**
Power Unit **89**
syringe **45**
Syringe Heat Maintainer **99**
wall mount (Display Control Unit) **97**
Intermediate position **28**
ISI, see Imaging System Interface
M
manual knob **27, 32**
modify options **25**
O
OCS
installation **93**
weight and dimensions **126**
Operational Checkout **82**
Options tab **24**
modify **25**
P
Pedestal
cleaning **81**
inspection **81**
installation **86**
weight and dimensions **123**
pedestal system

weight and dimensions **121**
piston
cleaning **77**
Popups **71**
Power Unit **17**
Air Filter **81**
cleaning **81**
connections **90**
floor mount **91**
input requirements **14**
inspection **81**
installation **89**
relocate connectors **92**
weight and dimensions **123**
Power up **33**
Pressure Jacket **27, 78**
cleaning **77, 78**
description **29**
inspection **79**
storage **29**
pressure limit **30**
pressure limiting **14**
Programmed window **23**
set Phased protocol **36**
set Single protocol **35**
protocol
create Phased on Protocols tab **39**
create Single ml/m on Protocols tab **38**
create Single ml/s on Protocols tab **38**
define **53**
delete **43**
edit **42**
edit phased **42**
edit single ml/m **42**
edit single ml/s **42**
recall stored **41**
set phased in Programmed window **36**
set single in Programmed window **35**
Protocols tab **24**
create Phased protocol **39**
create Single ml/m **38**
create Single ml/s **38**
purge
confirmation **55**
high pressure connector tubing **49**
purge action **55**
syringe **47, 64**
Purge position **28**
purge, 15 mL Purge Feature **52, 65**
Q
Quick Fill Tube **47**
R
refill syringe **64**
rise time **36**
S
Sentinel window **23, 24**
messages **69**
sterile sheath installation **102**
syringe
fill **47**
installation **45**
purge **47, 64**
refill **64**
Syringe Heat Maintainer **16, 32**
cleaning **81**
installation **99**
syringe interface **28**
cleaning **77**
T
Table Bracket
cleaning **77, 81**
table cable bracket **103**
installation **103**
insert only **104**
Table Mount
inspection **81**
V
volume **30**
volume remaining **30**
volume remaining icon **30**
W
wall mount **97**
convert swing direction **98**
weight and dimensions **130**
weight and dimensions
adjustable table mount **124**
desk stand **129**
Display Control Unit **122**
Fixed table mount **129**
head stand **124**
Injector Head **122**
OCS **126**

Pedestal **123**
pedestal system **121**
Power Unit **123**
wall mount **130**

Bayer reserves the right to modify the specifications and features described herein or to discontinue any product or service identified in this publication at any time without prior notice or obligation. Please contact your authorized Bayer representative for the most current information.

All patient data that appear in this document are fictitious. No actual patient information is shown.

Bayer, the Bayer Cross, MEDRAD, Mark 7 Arterion, MEDRAD Mark 7 Arterion, MEDRAD FluiDots, FluiDots, MEDRAD VFlow, VFlow, MEDRAD Twist & Go, Twist & Go, and VirtualCare are trademarks owned by and/or registered to Bayer in the US and/or other countries. Other trademarks and company names mentioned herein are properties of their respective owners and are used herein solely for informational purposes. No relationship or endorsement should be inferred or implied.

© 2011-2014, 2016-2018 Bayer. This material may not be reproduced, displayed, modified, or distributed without the express prior written consent of Bayer.

86407590 Rev. B April 30, 2018

Bayer 拜耳 バイエル باير Байер

To provide feedback or request support, please use the contact form provided on radiology.bayer.com/contact

CE 0086

Manufacturer
Bayer Medical Care Inc.
1 Bayer Drive
Indianola, PA 15051
U.S.A.
Phone: +1-412-767-2400
+1-800-633-7231
Fax: +1-412-767-4120

EC REP **Authorized European Representative**
Bayer Medical Care B.V.
Horsterweg 24
6199 Maastricht Airport
The Netherlands
Phone: +31(0)43-3585601
Fax: +31(0)43-3656598

Authorized Japanese Representative
バイエル薬品株式会社
〒530-0001
大阪市北区梅田2-4-9
日本
電話:+81(0) 6-6133-6250
Fax: +81(0) 6-6344-2395